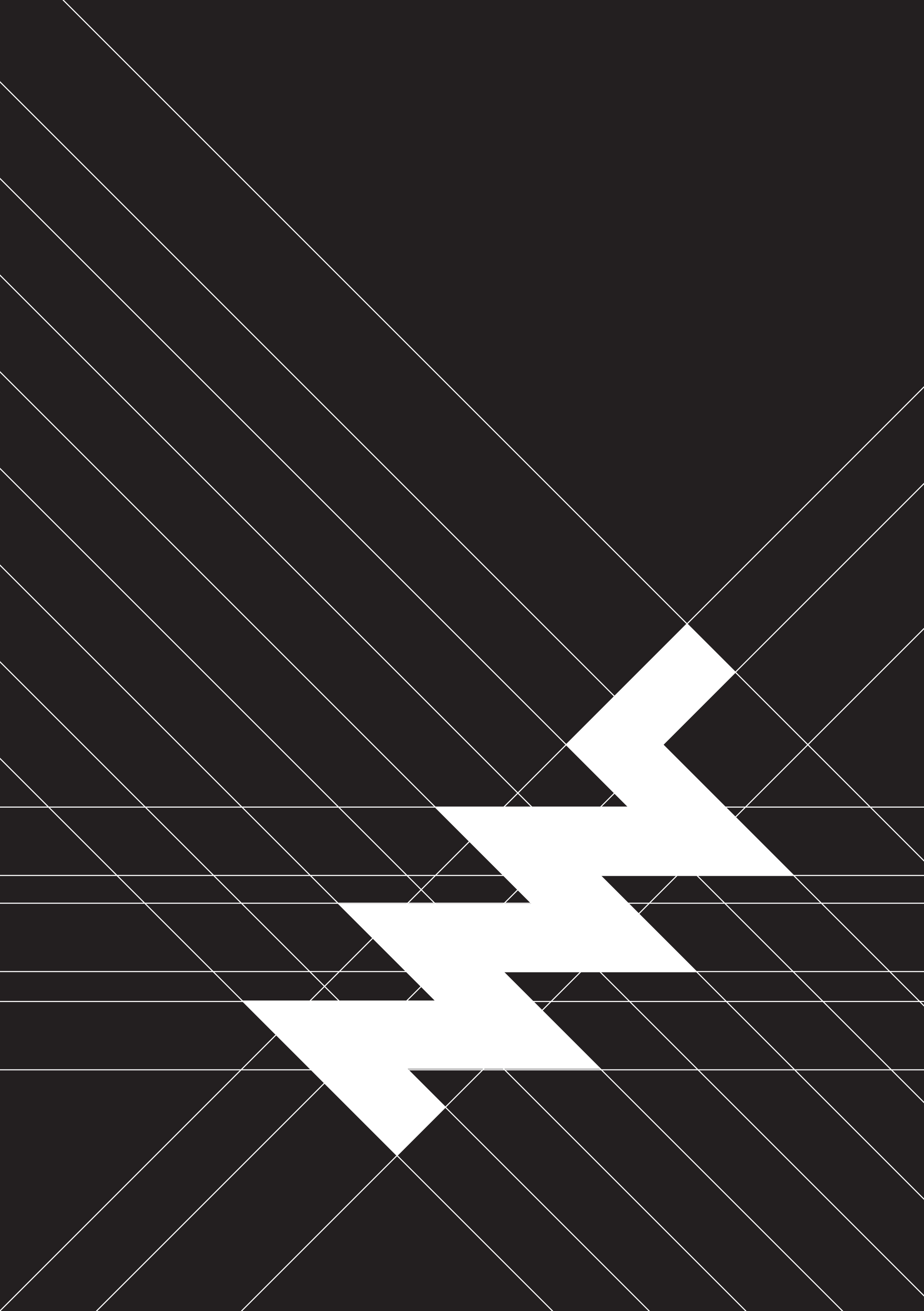

Contents

Preface to the Second Edition **v**

Preface to the First Edition **vii**

1 Safety & Recycling **1**
1.1 Hazards 1
1.2 Recycling 2

2 Quick Start **3**
2.1 Step 1: Connect Batteries 3
2.2 Step 2: Turn On 4
2.3 Step 3: Log In 5

3 Input Devices **7**
3.1 Keyboard 8
3.2 OLED Menu 9
3.3 Trackball 11
3.4 Trackpad 12

4 Linux Console Basics **13**
4.1 Console and Shell 13
4.2 Root User 14
4.3 Create a New User and Password 14
4.4 Logging In and Out 15
4.5 Sudo 15
4.6 File System 16
4.6.1 Filesystem Hierarchy 17
4.6.2 Home Directory 18
4.6.3 Dot Files 18

4.6.4 Permissions 19
4.6.5 Pipes 20
4.6.6 Links 20
4.6.7 Finding Files 21
4.6.8 Mount Points 21
4.7 Environment Variables 22
4.8 Working with Text Files 23
4.9 Scripts 24
4.10 What Is My Computer Doing? 24
4.11 Inspect Hardware 25
4.12 Clock 26
4.13 Network 26
4.14 Bluetooth 27
4.15 Dual Display 27
4.16 Shutdown 28
4.17 Standby 29
4.18 Installing and Removing Software 29

5 Graphical Desktops **31**
5.1 Sway and Wayfire 31
5.1.1 Top Bar 32
5.1.2 Launching Applications 33
5.1.3 Workspaces 33
5.1.4 Display Brightness 33
5.1.5 Network and Wi-Fi 34
5.1.6 Bluetooth 34
5.2 Sway Specifics 35
5.2.1 Tiling 35
5.2.2 Sway Config File 36
5.2.3 Keyboard Layout 36
5.2.4 Trackball/Trackpad Speed 36
5.2.5 External Displays 37
5.3 Wayfire Specifics 38
5.3.1 Wayfire Config File 38
5.3.2 Keyboard Layout 38
5.3.3 Trackball/Trackpad Speed 39
5.4 Alternative Desktops 39

6 Software **41**

6.1 Preinstalled Software 41
6.2 Updating Software 44
6.3 Flashing the System Image 44
6.4 Reform Tools 45
6.5 Binary (In)compatibility 46
6.6 Running x86 Software 47
6.7 GPU Hacks 47

7 Hardware 49
7.1 Case Parts 50
7.1.1 Main Box 51
7.1.2 Keyboard Frame 52
7.1.3 Screen Back 53
7.1.4 Screen Front 55
7.1.5 Bottom Plate 56
7.1.6 Port Covers 57
7.2 Motherboard 58
7.2.1 Revised Versions 59
7.2.2 System Controller 60
7.2.3 Flashing the Firmware 62
7.2.4 Expansion Port 64
7.2.5 mPCIe Socket 65
7.2.6 M.2 Socket (Key M) 66
7.3 Processor Module 67
7.3.1 Display Connector 68
7.4 Heatsink 68
7.5 Keyboard 69
7.5.1 Keyboard Firmware 70
7.5.2 Backlight 71
7.5.3 Replacing a Keycap 71
7.5.4 Replacing a Keyswitch 71
7.6 OLED Module 72
7.7 Trackball 73
7.7.1 Trackball Cleaning 74
7.7.2 Trackball Firmware 75
7.8 Trackpad 75
7.8.1 Trackpad Firmware 76
7.9 Exchanging Trackball and Trackpad 77
7.10 Battery Packs 77

7.10.1 Compatible Battery Cells 78
7.11 Compatible Displays 79

8 Advanced Topics 81
8.1 Troubleshooting 81
8.1.1 Boot Issues 81
8.1.2 Serial Console 82
8.1.3 Electronics Repair 83
8.1.4 System Controller 84
8.1.5 Software Issues 85
8.2 System Boot 85

9 Schematics 87
9.1 Motherboard Schematics 87
9.2 Motherboard Bill of Materials 100
9.3 Keyboard Schematics 106
9.4 Keyboard Bill of Materials 110
9.5 OLED Schematics 111
9.6 Trackball Schematics 113
9.7 Trackball Bill of Materials 115
9.8 Trackball Sensor Schematics 115
9.9 Trackball Sensor Bill of Materials 117
9.10 Trackpad Schematics 117
9.11 Trackpad Bill of Materials 119
9.12 Battery Pack Schematics 119
9.13 Battery Pack Bill of Materials 121
9.14 Assembly Parts 121

10 Online Resources 125

11 Credits 127

Preface to the Second Edition

A second edition of the MNT Reform Operator Handbook—so soon? Well, we are astonished, too! The past four years went by so quickly and a lot has changed since we first introduced our MNT Reform laptop, so it's about time to provide a fresh, up-to-date handbook.

At the time of writing, more than 500 people call the MNT Reform their own—amazing! Your support means a lot to us and keeps us going.

Since the initial release of Reform, we have developed several Processor Modules, updated software, firmware and hardware, and made changes based on open source contributions from the MNT community. We have created quite a few Reform products by now, such as the Reform Standalone Keyboard, the Reform Camera and the Pocket Reform. They are all compatible with each other, forming the MNT Reform family.

With MNT Reform, we provide open and sustainable alternatives to today's closed hardware ecosystems. Our devices are meant to be understood and improved by anyone—and community is a vital element in this context. By helping each other and working together we have a chance to create a future where accessible open hardware thrives.

Many of you participate in the MNT Community[1], actively sharing the progress of your customizations, additions of new features or modifications to your Reform(s). Feel free to drop by—we'd like to see you there!

---

[1] `https://community.mnt.re`

Preface to the First Edition

Early in the MNT Reform project, we made—working in the kitchen—13 prototypes for us and a handful of adventurous people. These were much more primitive predecessors of the laptop that you received today, based on an older processor and an eclectic mix of materials. Each already came with an *Operator Handbook:* 30 manually bound pages of schematics and instructions for handling the prototype. It was but a rough sketch of the book that you are reading now.

The original handbook turned out to be an icebreaker and conversation aid when talking about MNT Reform with other people. We wrote this new handbook in the same spirit: to make your MNT Reform more approachable, understandable, but also more discussable. The book will be your companion when taking MNT Reform apart and learning the basics of using the machine.

At a time when electronics are becoming ever more secretive, MNT Reform and this book buck the trends—but they are not sacred artifacts. They are meant to be taken apart, discussed, hacked, built upon. Scribble in the margins. Make it your own.

Chapter 1

Safety & Recycling

1.1 Hazards

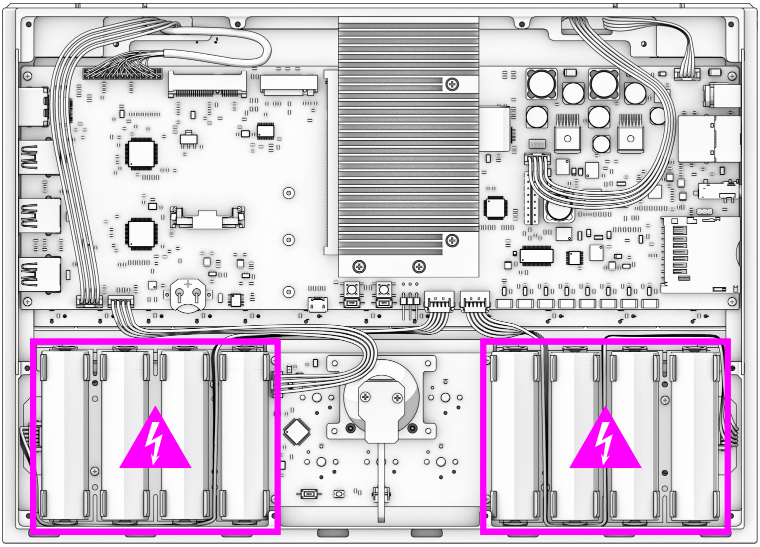

Before you get started with your MNT Reform, please read these safety instructions carefully to prevent harm to yourself and your environment.

Electrical Shock and Fire Hazard: Please be extra careful while and after opening the case of the device. MNT Reform uses 8 batteries in series. When fully charged, these combine to a voltage of almost 29 volts, and the battery cells can easily deliver multiple amperes of current. Do not touch the metal pins of the battery holders with metal tools.

Before servicing anything on the inside, make sure that the wall power is unplugged and remove all battery cells.

Damage to Hearing: The headphone output of MNT Reform can be forced to extreme volume which may damage your hearing if you are not careful. Please make sure to set the volume to 30% or less before connecting headphones to MNT Reform, and then adjust the volume to a comfortable level.

1.2 Recycling

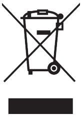

Don’t throw any MNT Reform parts in the trash! Batteries and electronics contain materials that are harmful to the environment if not properly disposed of.

You can mail any of the parts back to MNT Research, and we will recycle them for you. Alternatively, you can recycle batteries at a local battery collection facility and dispose of electronics and cables at a local e-waste facility.

Chapter 2

Quick Start

2.1 Step 1: Connect Batteries

To prevent discharge during shipment, the battery cables are not connected by default. After reading about **Safety** in the previous chapter, unscrew the 10 bottom screws and remove the bottom plate. Attach the two battery cable plugs to the battery connectors on the motherboard, then reinstall the bottom lid.

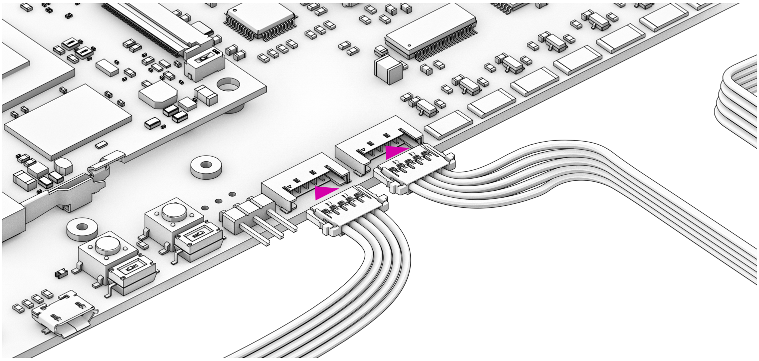

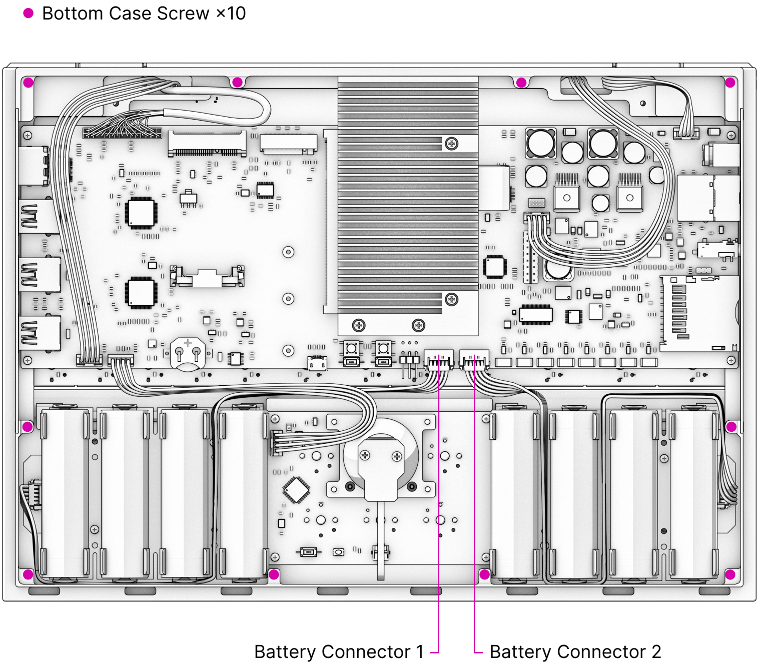
● Bottom Case Screw ×10
Battery Connector 1
Battery Connector 2

2.2 Step 2: Turn On

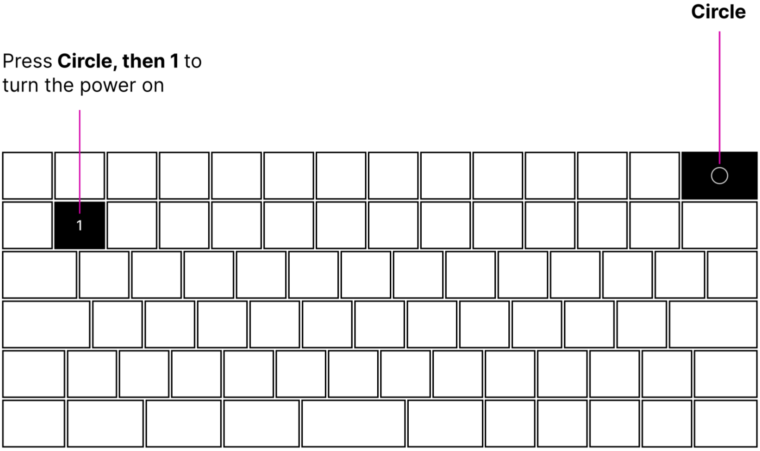
Press **Circle, then 1** to turn the power on

First, insert the included SD card into the slot on the left hand side of the device.

Then, to turn Reform on, press *Circle* and then *1*.

The *Circle* key is used for system control commands. When you press *Circle*, a menu of system control functions and their shortcuts will be displayed on the OLED screen embedded in the keyboard.

To save power, the status of the *Circle* key will only be queried once per second, so you need to press *Circle* for at least one second for the menu to show up.

2.3 Step 3: Log In

After being powered on, the main processor will boot the operating system installed on the inserted SD card. The operating system's kernel will show diagnostic information as it activates all the devices in the system until finally arriving at the login prompt. On first boot, the Setup Wizard will walk you through the configuration process. You'll select your keyboard layout and your time zone, choose a desktop environment, and finally, create a user account. Once everything is set up, you can start installing software and using MNT Reform. If you are new to the Debian GNU/Linux operating system or want to learn about specifics of the system software shipped with MNT Reform, please refer to the chapters "Linux Console Basics", "Graphical Desktops", and "Software".

The following chapter will introduce you to the input devices of MNT Reform.

Chapter 3

Input Devices

MNT Reform comes with a keyboard and either a trackball or a trackpad preinstalled. All of the input devices are modular and can be swapped in and out. They all connect via internal USB 2.0 cables.

3.1 Keyboard

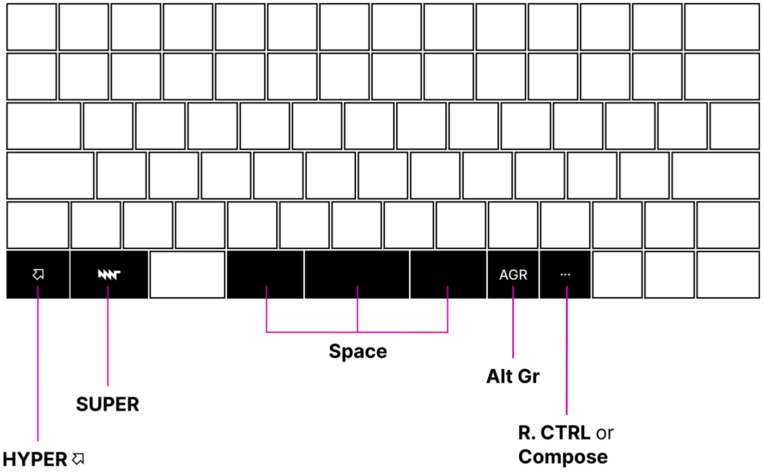

With our newest keyboard[1], we designed in all necessary concave keycap sizes to achieve a traditional stagger, and a contiguous convex space bar which is easier on the thumbs. It is still split, but you can hit it without even thinking about it. If you're an advanced user, you can also remap two of these space keys. Additionally, we included two homing keycaps to improve navigation while touch typing.

Because many advanced users remap the traditional Caps Lock key to a different function, we swapped Caps Lock for a *CTRL* key. This makes the use of *CTRL* key combinations more ergonomic.

Next to the new *AGR* key—short for "Alternate Graphic", located next to the space bar—is a key with 3 dots (an ellipsis). It is intended as a user-defined key, which is mapped to *Right CTRL* by default. We recommend remapping this key to *Compose*, a key that allows you to generate Unicode symbols from Compose sequences.

---

[1] If you happen to own one of the first MNT Reform laptops, you might have noticed a slightly unusual layout of the keyboard. Back in the day, we simplified the traditional typewriter-based layout so that the keyboard could be constructed using only two distinct key shapes that were available to us (square and 1.5x). The biggest difference was the split space bar: instead of one long key, there were two 1.5x wide space keys, with left and right Alt keys sandwiched between them. However, this proved to be too experimental a layout for some people to get used to.

Lastly, MNT Reform features an additional modifier key, the *HYPER* key, in the lower left. *HYPER* provides an additional layer of key combinations. Here is the list of shortcuts you can use with *HYPER*:

Shortcut	Function
HYPER+F1	Decrease Brightness
HYPER+F2	Increase Brightness
HYPER+F7	Previous Track
HYPER+F8	Play
HYPER+F9	Next Track
HYPER+F10	Silent
HYPER+F11	Volume Down
HYPER+F12	Volume Up
HYPER+←	Home
HYPER+→	End
HYPER+↑	Page Up
HYPER+↓	Page Down

3.2 OLED Menu

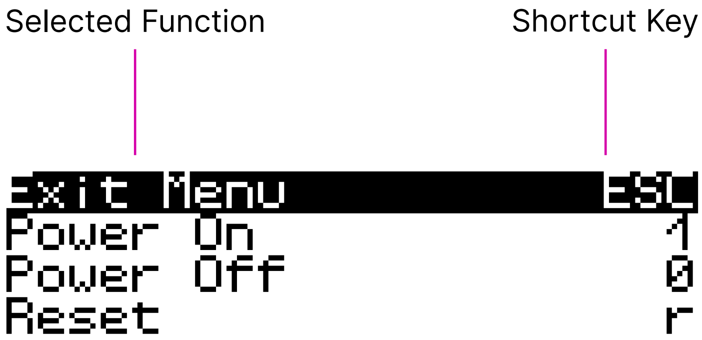

The keyboard has a built-in OLED display for interaction with the System Controller on the motherboard. You can highlight an option and scroll through the menu by using the ↑ and ↓ keys. To trigger the highlighted option, press *ENTER*. Alternatively, you can press the shortcut key that is displayed on the right hand side of each menu option. For example, to show the Battery Status, press *B* when the menu is active. To leave the menu, press *ESC*.

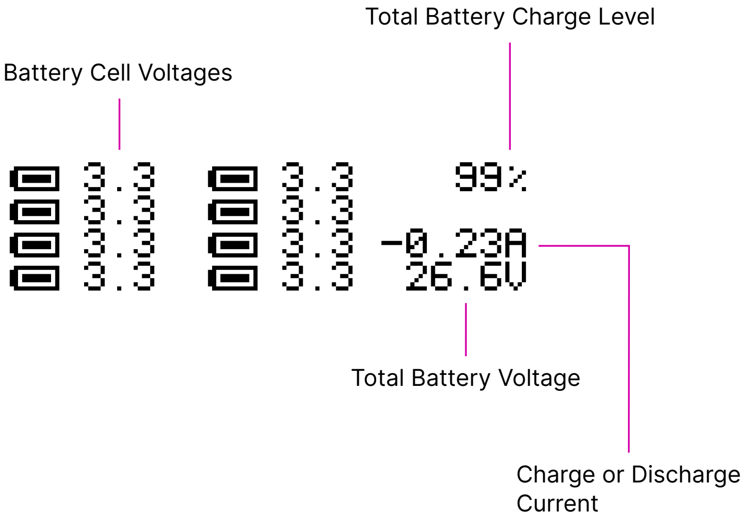
Total Battery Charge Level
Battery Cell Voltages
3.3 3.3 99%
3.3 3.3
3.3 3.3 -0.23A
3.3 3.3 26.6V
Total Battery Voltage
Charge or Discharge Current

You can see detailed battery information including the estimated total charge percentage on the Battery Status screen reachable through the OLED menu. Each cell icon corresponds to one of the eight battery cells. The leftmost group of four icons represents the battery pack on the left side of the device, and the group on the right represents the battery pack on the right—assuming you look at MNT Reform when flipped on its back and the batteries closest to you.

For the left pack, the top battery icon represents the leftmost cell in the pack, and the bottom icon represents the rightmost cell. For the right pack, it is the other way around, because the pack is rotated by 180 degrees in the laptop.

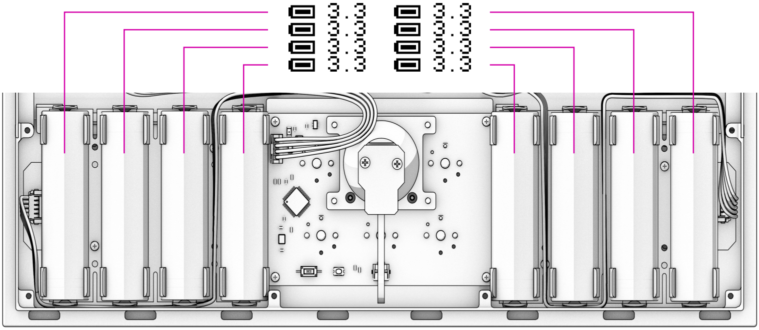
3.3
3.3
3.3
3.3
3.3
3.3
3.3
3.3

The illustration shows which icon and voltage on the OLED display corresponds to which battery cell in the device.[2]

3.3 Trackball

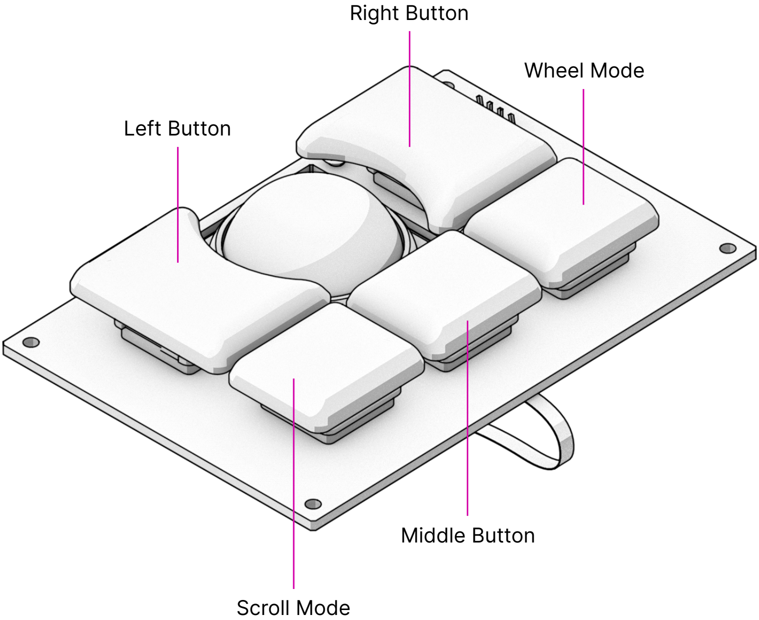
Right Button
Wheel Mode
Left Button
Middle Button
Scroll Mode

The trackball works like a mouse with three buttons (left, middle, and right click). Roll the ball to move the cursor. In addition to the standard mouse buttons, the trackball also has two *Scroll Mode* buttons. Holding down either while moving the ball will scroll the currently focused content. Pressing both *Scroll Mode* buttons together will turn on *Sticky Scroll Mode*, so that you can scroll through a longer text without needing to hold down a button.

---

[2] Note that this order is only valid for the Protected Battery Boards.

3.4 Trackpad

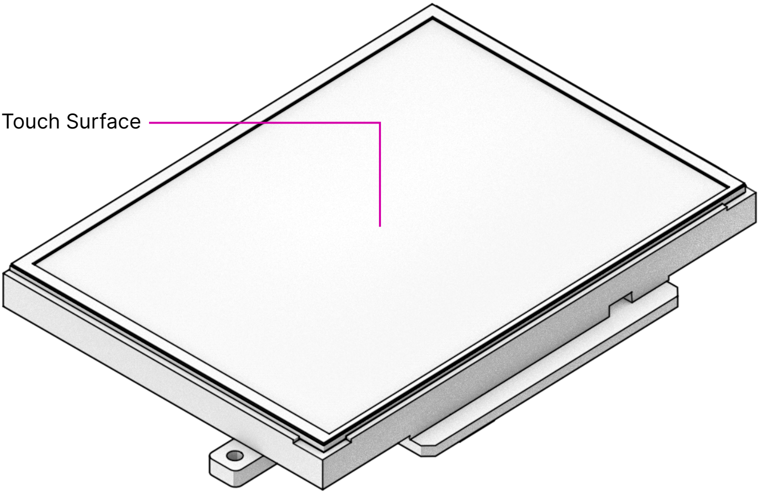

Unlike the trackball, the trackpad doesn't have any buttons. Slide one finger across the surface to move the cursor. Tapping with one finger acts like a left mouse button click. Slide two fingers across the surface to scroll in any direction. Tapping with two fingers performs a right click. To click and drag, use three fingers. Tapping with three fingers is equivalent to a middle click.

Chapter 4

Linux Console Basics

4.1 Console and Shell

MNT Reform ships with a lightly customized Debian GNU/Linux distribution on the provided SD card. With the SD card inserted, MNT Reform will boot to a login screen.

From here, you can reach a graphical desktop or the Linux console. If something goes wrong, you can always go back to the console and fix things—if you know a few basics of Linux administration. To reach the console from the login screen, you can use the key combination *ALT+F1*, or *ALT+F2* to go to the second console, etc.

After logging in on the console, you are in control of a shell. The default shell is called `bash`[1], but there are many other shells available. You can use the shell to type in commands for your computer to execute, but also to write programs (scripts) that combine commands to do more complex tasks. For example, this handbook is generated by a `bash` script combining a few text and graphics related tools.

This chapter will introduce you to the basics of exploring and administering your MNT Reform system using the shell first and then a graphical desktop. You can also launch shells on the desktop to use tools that don't have a graphical user interface. Using these tools, you can troubleshoot some problems with the operating system by yourself.

---

[1] The "GNU Bourne-Again Shell".

4.2 Root User

The most powerful user in the system is `root`. When logged in as `root`, you can modify but also destroy any file in the system. To prevent others from logging in as `root`, you should protect the account with a password (the Setup Wizard asks you to do this). In the shell, you execute all commands by typing them in and pressing *ENTER*. To set your password, execute this command:

```
passwd
```

The `passwd` command will ask you for a new password two times, but will not display it while typing (so it cannot be gleaned by onlookers).

During normal Linux usage you will rarely want to be `root`—only when performing changes to the system configuration, which includes adding or removing users or software and controlling background services. Instead, you should create a less privileged user account for yourself.

4.3 Create a New User and Password

You have created a user in the Setup Wizard after powering on your MNT Reform for the first time. In order to add another user account to the system, log in as `root` and execute the `adduser` command:

```
adduser kim
```

This will create a new user named `kim`, and add a new home directory for `kim` at `/home/kim`. The `adduser` command will ask you for a password and a few questions that you can skip by just pressing *ENTER*.

If you want to change the password for the user `kim` later, you can use the `passwd` command as before:

```
passwd kim
```

4.4 Logging In and Out

You can log out of the console or a terminal window by pressing *CTRL+D*. Alternatively, you can type `exit` in the terminal.

When logged out, you will see the login prompt. Type the username that you added in the previous step and press *ENTER*. Next, type your password (it is not displayed). Press *ENTER* to complete the login.

4.5 Sudo

To make bigger changes to the system you will often need to use a command that requires `root` (superuser) privileges. Logging out of your user account just to log back in as `root` is inconvenient. Instead, you can temporarily become `root` by either switching to it as `su` (switch user) or give your regular user account `sudo` privileges[2].

Sudo allows you to use a command as `root` by typing `sudo command`—but only if you are a member of the `sudo` group. To add your user to the `sudo` group, first log out and login as `root`. Then you can execute the following command:

```
usermod -a -G sudo kim
```

(Substitute your username for `kim` here).

---

[2] `sudo` means “switch user and do”.

The `-a` flag means “Append the user to the group”, while the `-G` option specifies the name of the group you want to add the user to: `sudo`.

Log out and login as your regular user again. From now on, you can execute commands which require root privileges using `sudo`. For example, to shut down your computer safely before turning it off, you can type:

```
sudo shutdown now
```

4.6 File System

Your system’s file storage is organized in a tree of directories. To move around in it, you use the `cd` command to change the current directory. The top of the hierarchy is called root (not to be confused with the superuser of the same name), but written as the symbol `/`. To go to the root directory, enter:

```
cd /
```

To see what’s here, use the `ls` (list) command:

```
ls
```

If you want to know more details, such as the modification times and permissions of files, use:

```
ls -l
```

You can also add the flag `-h` to get “human readable” file sizes instead of the raw number of bytes:

```
ls -lh
```

There are two virtual files in every directory, called “..” (two dots) and “.” (one dot). The single “.” means “here” (i.e. the current directory), and you can use it if you ever want to specify the current directory explicitly. For example, if you want to copy the file `/tmp/myfile` to the current directory, you can type:

```
cp /tmp/myfile .
```

To go to the parent directory (a top-level directory that contains subdirectories, the so-called “children”), use:

```
cd ..
```

Commands like `ls` have many options. To learn about them, you can read the built-in manual pages:

```
man ls
```

With `man` you can learn more about any command. You should make yourself familiar with the most important commands like `cp` (copy), `mv` (move), `rm` (remove), `mkdir` (make directory), `mount` and `ln` (link). Armed with this knowledge, you will be able to navigate any UNIX-like system, not only Linux.

4.6.1 Filesystem Hierarchy

When you issue `ls` at the root of the filesystem (/), you will see the following directories:

Directory	Purpose
/	Top (“root”) of the filesystem
/bin	Commands (“binaries”), such as `ls`, `cp`
/sbin	Commands usually only used by `root`
/lib	Libraries (common code shared between binaries)
/usr	Files managed only by the package manager
/boot	Boot loader related files (like Linux kernel[3])
/etc	System configuration files
/home	Home directories of user accounts
/root	Special home directory for `root`
/mnt	A place to mount other filesystems
/media	Another place to mount filesystems
/proc	Live information about processes
/sys	More live information from the kernel
/dev	Device files providing access to hardware
/run	Temporary files related to background services
/tmp	Temporary files—deleted on restarts

---

[3] The kernel is the privileged core of the operating system.

Directory	Purpose
/srv	Files used by servers such as web servers

A good way to explore files and directories that take up disk space is using the `ncdu` program. It calculates the size of each (sub)directory and allows you to browse your filesystem and even delete unwanted files (you should only do this in your home directory, though):

```
ncdu /
```

4.6.2 Home Directory

If your username is `kim`, your home directory is located at `/home/kim`. There's a shortcut for your home directory using the tilde symbol `~`. To go to your home directory, you can type:

```
cd ~
```

If you list the contents of your home directory, you will see a number of directories with self-explanatory names, such as `Pictures`, `Music`, `Documents` and `Downloads`. The last one is used by web browsers to store downloaded files, for example. Feel free to create your own subdirectories in your home directory as needed.

4.6.3 Dot Files

Your home directory also contains a number of hidden files and directories called "dot files". Their names start with a dot (`.`) and for tidiness, are usually hidden. To see them, use the `-a` flag with `ls`:

```
ls -a
```

Often times, dot files contain your personal configuration for certain programs. Many programs collect configuration files in the `~/.config` subdirectory.

4.6.4 Permissions

As you are the owner of your home directory, your user account is allowed to modify any files and subdirectories contained in it. But you cannot change system configuration files in `/etc` or delete a command in `/bin`, except if you're `root`. This is because of the ownership and permission settings on these files and directories.

If you list the contents of your home directory with `ls -l`, you will see your username twice in each row, after a cryptic-looking column of letters and dashes and a number:

```
drwxr-xr-x  4 kim kim 4096 Nov  2 20:52  Music
rw-r--r--   1 kim kim    8 Jan  9 20:03  notes.txt
```

The letters and dashes at the beginning describe the file mode bits of the file or directory. A "d" at the beginning signifies a directory. The following 9 letters are three triplets describing "user" (owner), "group", and "all" permissions, in that order. "r" means read, "w" write and "x" execute. An "x" on a file means that this is an "executable", a program that can be run, or in the case of a directory, that it can be entered.

The first occurrence of a username in each row is the owner of the file or directory. The first triplet of mode bits on `notes.txt` tells you that you, the owner, can read and write but not execute this file (after all, it is just a text file).

The second occurrence of `kim` names the group `kim`, not the user. When you create a new user, the system also creates a group with the same name and only you as a member. You could add other users to your group to share files with them, for example. The second triplet of mode bits, `r--`, tells you that members of this group can only read your file, not change it.

Lastly, the third mode triplet (`r--` in this example) says that any other user logged into your system can read this file.

To change the mode bits of a file, you can use `chmod`. For example, to give nobody but yourself (assuming you're the owner) the permission to read and write the file `notes.txt`, execute:

```
chmod a=,u=rw notes.txt
```

This invocation first sets an empty list of modes for all users (`a=`) and then read and write modes for the user/owner (`u=rw`) on the file.

To learn more about managing modes and ownership, be sure to read the `man` pages for `chmod`, `chown`, and `chgrp`.

4.6.5 Pipes

Linux features some advanced concepts that are central to the UNIX philosophy (Linux is a flavor of UNIX). One that you will often encounter is the pipe, symbolized by `|`. You can use pipes to feed the output of one program to the input of another program. For example, you can use the pager `less` to paginate a long stream of text, such as the output of `dmesg`. This tool prints all diagnostic messages of the operating system kernel, and using `less` lets you view it page-by-page instead of having to scroll back to the beginning:

```
dmesg | less
```

Or page through a long list of files:

```
ls -la ~/Downloads | less
```

You can also build more complex pipelines. The following command will output the last 5 lines containing the word “usb” in the kernel log:

```
dmesg | grep usb | tail -n 5
```

4.6.6 Links

If you list the contents of `/usr/lib` with `ls -l` you will see a number of files that point to another file with an arrow (->). This is because the file on the left hand side is a “symbolic link” to the “real” file on the right hand side. Symbolic links and "hard links" can be created using the `ln` command as a means to point to a file using another name. This can be useful to create shortcuts. Refer to the manual page with `man ln` to learn about the details of links.

4.6.7 Finding Files

If you don't remember where you put a file, or want to search a complex hierarchy of directories for something specific, you can use `find`:

```
find -name "notes*"
```

This will display any file or subdirectory whose name starts with "notes" in the current directory. `man find` will reveal many more options for finding files.

The `rgrep` command will look for words in the content of a file:

```
rgrep --color spice
```

This will look for any occurrence of the word "spice" in files in the current directory and its subdirectories, and display each line in which the word was found, with the word itself highlighted.

4.6.8 Mount Points

The root directory / is actually a collection of filesystems "mounted" into one virtual filesystem. These can be located on different disks, media or even the network—or be purely virtual in the case of `/dev`, `/proc` or `/sys`.

For example, if you want to access files stored on a USB stick, you would first mount one of the filesystems contained on the USB stick into an empty directory called a mount point. This could be something like `/mnt` or `/media/usb-stick`. Usually, desktop environments can help you to automatically mount removable media, but it's useful to know how to do the same process manually.

First, you need to find the block device of the media you want to mount. For this, you can use the command `lsblk`. An example (partial) `lsblk` output could be:

```
NAME          MAJ:MIN RM   SIZE RO TYPE  MOUNTPOINT
sda             8:0    1  28.9G  0 disk
  sda1          8:1    1  28.9G  0 part
```

Here, `sda1` is the block device of the first partition on the USB stick. If you are unsure which is the right device, you can issue `dmesg -w` and then plug in the USB stick. You'll see something like this appear in the kernel log:

```
[...] sd 0:0:0:0: [sda] Attached SCSI removable disk
```

Which tells you that `sda` (or in your case, something else) is the block device you're looking for.

To mount the partition on the USB stick at `/mnt`, do:

```
sudo mount /dev/sda1 /mnt
```

If successful, this will—in UNIX tradition—output nothing, and you can find your files by navigating to `/mnt` with the usual commands.

Before unplugging your USB stick, you should unmount it. This makes sure any pending changes are written to the device (note that the command is `umount`, not "unmount"):

```
sudo umount /mnt
```

4.7 Environment Variables

As the shell is not only a command interpreter but also a programming environment, it supports variables. These are placeholder names that contain a value that can be changed at any time. For example, you could make a universal greeting command like this:

```
echo Hello, $name.
```

The output of this command changes depending on the value of the variable `$name`. To change the variable:

```
name=World
```

If you now execute the same `echo` line as before, you'll see this output:

```
Hello, World.
```

Variables are often used to define an environment for other programs. This means that a program can change its behavior according to these variables. These so called environment variables are set before starting the program. To see all currently defined environment variables, you can use the `env` command. You will see a few specific ones among the output:

```
HOME=/home/kim
PWD=/home
SHELL=/bin/bash
USER=kim
```

This means that another way to reach your home directory is `cd $HOME`, and another way to refer to your username is `$USER`. A critically important variable is `$PATH`, which is a list of directories (separated by ":") that the shell searches when looking for a command that you want it to execute. For example, when you type `ls`, your shell will only find it if `/bin` is in your `$PATH`, because `ls` actually resides at `/usr/bin/ls`.

4.8 Working with Text Files

Most system configuration is done by editing text files.

The two most common text editors in Linux are `vim` and `emacs`, which both have a steep (but rewarding) learning curve. Thus, Reform system provides an editor more suited for beginners called `micro`.

You can create, view, and edit files using the `micro` text editor. To edit a file in the current directory named `file.txt`, use:

```
micro file.txt
```

While in micro, you can use *CTRL+S* to save, *CTRL+Q* to quit, and *CTRL+G* to display a help menu.

4.9 Scripts

By now you know most of the ingredients to be able to write shell scripts: programs interpreted by the shell. By writing shell scripts, you can create your own commands to extend the capabilities of your computer. Here is an example script that greets the user:

```
#!/bin/bash

day=$(date +%A)
echo Hello, $USER. Today is $day.
```

The first line of the script, called the “shebang” line is important to tell the operating system that this script is to be interpreted by the shell `/bin/sh`. Save the script to a file named `greet.sh`. Mark the file executable and execute it:

```
chmod a+x ./greet.sh
./greet.sh
```

You can learn more about programming the shell by reading its manual page `man sh`. The more advanced `bash` shell is documented in `man bash`.

4.10 What Is My Computer Doing?

You can check your RAM usage, CPU usage, and processes currently running by using `htop`:

```
htop
```

Hit *F1* to display the built-in help screen.

You will see that there are a few processes running that you didn’t start yourself. These are background processes, also called services, daemons, or units. They are controlled by `systemd`, the so-called "init system". It is the first program started by the Linux kernel, and it spawns all other programs including services. You can learn more about systemd by reading the manual page:

```
man systemd
```

The most important commands to manage systemd are `systemctl` and `journalctl`. Their manual pages are worth a look, too. To see the list of known units and their status, you can use:

```
systemctl
```

To inspect a unit in more detail, you can pass its name to `systemctl`. For example:

```
systemctl status ssh
```

Instead of `status`, you can use verbs like `start`, `stop` or `restart` to control units.

The Linux kernel itself outputs a lot of diagnostic information at boot and when hardware changes (e.g. new devices are plugged in). To see the kernel log, you can (as superuser) use:

```
sudo dmesg -H
```

4.11 Inspect Hardware

The following commands are useful to inspect devices connected internally or externally:

Command	Description
`lsblk`	List block devices (storage).
`lsusb`	List USB devices.
`lspci`	List devices connected to PCIe ports.
`lscpu`	Get information about the processors.
`free -h`	Get information about system memory.

4.12 Clock

To see the current date and time, you can use the `date` command. The date and time are set by the `ntp` ("Network Time Protocol") service by synchronizing to time servers on the internet.

The motherboard of MNT Reform has a battery-backed real-time clock chip (PCF8523T, U5). This chip saves the date and time even if your system is shut down or loses power. You can interact (as `root`) with the clock using the `hwclock` tool. Review `man hwclock` for the details.

4.13 Network

MNT Reform has a built-in Gigabit Ethernet (1 GbE) port for networking. Additionally, you can install a Wi-Fi card in the mPCIe slot (depending on your Processor Module), or the module itself comes with a Wi-Fi chip.

Usually, you want to use a convenient management tool like `network-manager` (preinstalled) and the tool `nmtui` to manage your network connections.

To see and change details of your network connections, you can use the `ip` tool:

Command	Meaning
`ip addr`	Show the status of the network interfaces[4].
`ip route`	Show the network routing table.

You can trigger an automatic configuration of an interface via DHCP by executing `dhclient eth0`, and you can change the DNS servers by editing the file `/etc/resolv.conf`.

To connect to a remote computer via a secure shell connection, try `ssh` followed by the IP address of the computer you want to connect to. If you want to login to MNT Reform over the network, you can enable the secure shell daemon service as follows:

---

[4] `eth0` is the built-in Ethernet; `wlp1s0` is a Wi-Fi interface.

```
sudo systemctl enable sshd
```

You can then login to MNT Reform from another computer on your local network by executing:

```
ssh kim@192.168.1.242
```

Replace the username `kim`with your own username and the IP address `192.168.1.242` with your own IP address. You can find your IP address by looking for the `inet` entries in the output of the `ip addr` command.

Before using SSH functionality, you should generate a public/private key pair by executing `ssh-keygen`.

4.14 Bluetooth

Some Processor Modules, such as the RCM4 with A311D, feature integrated Bluetooth. This technology lets you connect to wireless devices that are close to your MNT Reform (usually a few meters), such as headsets, speakers or mobile phones. If you ever need to troubleshoot Bluetooth, you can try restarting its service using `systemctl restart bluetooth` or interact with `blueman` on the command line using `bluetoothctl`.

4.15 Dual Display

MNT Reform has an HDMI connector that has different functions depending on the installed Processor Module:

Module	Dual Display
i.MX8MQ	Yes
i.MX8MPlus	Yes

Module	Dual Display
LS1028A	No
RCM4 for Raspberry Pi	Yes
RCM4 with A311D	No
RK3588	Yes

To activate dual display with i.MX8MQ, for example, run the following command:

```
reform-display-config --dual
```

Other modules that support dual display will activate this function automatically.

4.16 Shutdown

To turn off MNT Reform, you should shut down the system cleanly by executing:

```
systemctl poweroff
```

or

```
sudo shutdown -h now
```

On the graphical desktop, you can click the `reform-tray` icon and select `shutdown`.

In the Debian system shipped with MNT Reform, the shutdown process will ask the System Controller to turn off the power. The OLED display will then show an animation of a disappearing MNT Research logo. In case you have to turn off the power manually (for example if the system is unresponsive or you are using an alternative OS), press *Circle* and then *0* (zero).

4.17 Standby

The standby function works with only some of our Processor Modules.

LS1028A doesn't support standby, and at the time of writing, it is still in development for A311D. The i.MX8MQ system-on-chip, on the other hand, can enter a low power standby mode. This function is stable for this module, but always save your work to disk regardless. In our tests, the power consumption in standby mode is roughly halved compared to the normal working mode.

To enter standby mode, execute the provided `reform-standby` script:

```
reform-standby
```

You can also use the `reform-tray` icon and select standby mode.

To make the system wake up from standby, select the *Wake* item from the keyboard OLED menu.

4.18 Installing and Removing Software

The Debian GNU/Linux distribution has access to a large number of software packages. No matter which desktop you use, these are centrally managed by `apt`, the package manager. Generally, on a Linux system you rarely download executables from the internet and launch them. Instead, you can cleanly install and remove software packages by using the package manager. `apt` also has the ability to search for keywords (or regular expression patterns):

```
apt search browser
```

This will list all packages in the `apt` cache that contain the keyword "browser". To refresh `apt`'s list of packages available in the online Debian *repository* (the library of packages), use the following command:

```
sudo apt update
```

If you have found a package you would like to install:

```
sudo apt install firefox
```

To remove (uninstall) the package from your system:

```
sudo apt remove firefox
```

To explore all of `apt`'s functionality, read the man pages for `apt` and `apt-cache`. If you are more comfortable with a graphical user interface for managing apt packages, you can use the command `reform-synaptic`.

Chapter 5

Graphical Desktops

5.1 Sway and Wayfire

MNT Reform ships with two graphical environments called “desktops”. The Debian distribution, which the system on the SD card is based on, has a number of additional desktops in its package manager (see section “Alternative Desktops” at the end of this chapter).

1. **Sway** emphasizes the concept of “tiling”. This means that normally, windows don’t overlap, but instead the screen space is automatically divided to make space for new windows. This desktop consumes minimal system resources, but relies heavily on keyboard shortcuts, which makes it harder to learn.
2. **Wayfire** features classic overlapping windows, a point-and-click driven interface, and a modern look. In Wayfire, you can drag windows to the corners or edges of the screen and they will be snapped. They also have minimize, maximize, and close buttons. If you’re accustomed to GNOME, Windows, or macOS desktops, you’ll find Wayfire quite intuitive.

You initially choose between Sway and Wayfire in the MNT Reform Setup Wizard. This choice will be reflected as the default on the login screen, but you can change it by pressing *F3*.

Sway and Wayfire look and work differently, but they share the following functionalities and keyboard shortcuts with *SUPER*[1]:

Key Combinations	Function
SUPER+ENTER	Open a terminal
SUPER+ESC	Close active window
SUPER+D	Find and launch programs
SUPER+SHIFT+S	Take screenshot (in ~/Pictures)
SUPER+SHIFT+X	Take screenshot of an area
SUPER+1...	Go to workspace 1–9
SUPER+SHIFT+1...	Move active window to workspace 1–9

5.1.1 Top Bar

Both desktops come with an information bar at the top of the screen provided by the `waybar` package. The bar is divided into the following sections:

Section	Action on click
MNT Research logo	Open the launcher
Icons of running applications	Switch to application
Workspace numbers (only on Sway)	Switch to workspace
Tray icons	Settings for network, volume, etc.
Clock	Toggle date/clock

---

[1] *SUPER* is the key with the MNT Research logo next to the *HYPER* key.

You can completely customize the top bar by editing the config file `~/.config/waybar/config` and the CSS-based styling file `~/.config/waybar/style.css`.

`man waybar` explains the available configuration options.

5.1.2 Launching Applications

Reform's Sway and Wayfire desktops include the `wofi` launcher, a popup menu for launching an application by typing a part of its name. Click on the MNT logo in the Top Bar or press *SUPER+D* to open the menu. Over time, `wofi` will remember the applications you regularly launch and will sort them by frequency of use.

5.1.3 Workspaces

If you have a lot of windows open, they might not all fit on the screen at once. For this purpose, multiple set of windows can be arranged in workspaces.

You can change your active workspace with the number keys, for example:

Shortcut	Function
SUPER+2	Go to workspace 2
SUPER+1	Go back to workspace 1
SUPER+SHIFT+5	Move active window to workspace 5

You can open different spaces for different programs. For example, you might want to put your code-editing programs in workspace 1, a web browser in workspace 2, and some instant messaging programs in workspace 3.

5.1.4 Display Brightness

You can set the display's brightness using the `brightnessctl` command or, more conveniently, use one of these keyboard shortcuts:

Shortcut	Function
HYPER+F1	Decrease display brightness
HYPER+F2	Increase display brightness

5.1.5 Network and Wi-Fi

You can connect to Wi-Fi networks and configure Ethernet as well as VPN connections by clicking the network icon in the top bar.

5.1.6 Bluetooth

If your system has Bluetooth, you'll see a Bluetooth icon in the tray area of the top bar. This icon is powered by the `blueman` package behind the scenes and clicking on it with the left mouse button will open the *Bluetooth Devices* window, where you can search for nearby devices to connect to. Right clicking on a Bluetooth device will give you the options to connect, pair, or get more information. You can also right-click on the Bluetooth icon in the top bar itself to open a context menu with more options, like toggling the Bluetooth visibility of your MNT Reform, sending files or reestablishing recent connections.

Note that any Bluetooth audio devices, when connected, will appear in *Volume Control* (started by launching it from the speaker icon in the top bar or manually from the launcher). Here you can choose them as the default output or input device and adjust the volume.

5.2 Sway Specifics

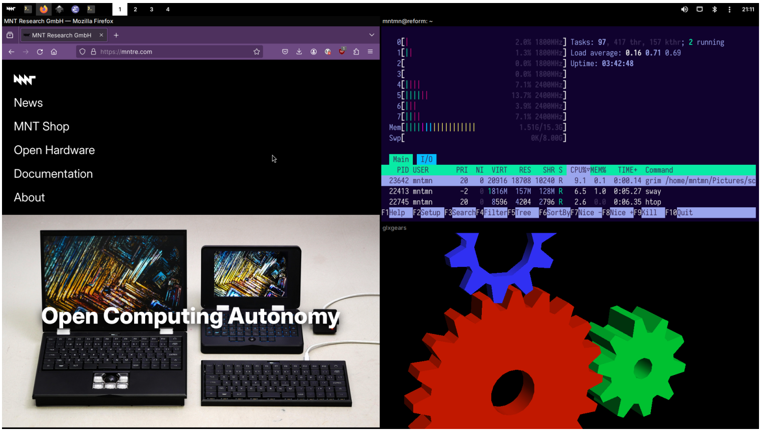
1
2
3
4
21:11
MNT Research GmbH — Mozilla Firefox
MNT Research GmbH
https://mntre.com
News
MNT Shop
Open Hardware
Documentation
About
Open Computing Autonomy
mntmn@reform: ~
glxgears

```
    0[|                          2.0% 1800MHz] Tasks: 97, 417 thr, 157 kthr; 2 running
    1[||                         1.3% 1800MHz] Load average: 0.16 0.71 0.69
    2[                           0.0% 1800MHz] Uptime: 03:42:48
    3[                           0.0% 1800MHz]
    4[||||                       7.1% 2400MHz]
    5[||||||                    13.7% 2400MHz]
    6[|||                        3.9% 2400MHz]
    7[||||                       7.1% 2400MHz]
  Mem[||||||||||||||||||          1.51G/15.3G]
  Swp[                               0K/8.00G]

  Main  I/O
    PID USER       PRI  NI  VIRT   RES   SHR S  CPU%▽MEM%   TIME+  Command
  23642 mntmn       20   0 20916 18708 10240 R   9.1  0.1  0:00.14 grim /home/mntmn/Pictures/sc
  22413 mntmn       -2   0 1816M  157M  128M R   6.5  1.0  0:05.27 sway
  22745 mntmn       20   0  8596  4204  2796 R   2.6  0.0  0:06.35 htop
F1Help  F2Setup F3SearchF4FilterF5Tree  F6SortByF7Nice -F8Nice +F9Kill  F10Quit
```

5.2.1 Tiling

You can start a new terminal window by using the shortcut *SUPER+ENTER*. When you press *SUPER+ENTER* multiple times to open several terminals, you'll notice that your currently open windows will be resized to accommodate for the new window. You can switch between these windows by holding the *SUPER* key and pressing the cursor (arrow) keys in the desired direction.

If you keep adding windows, they will continuously shrink horizontally, but if you would rather have a window split vertically, you can. Use these shortcuts for deciding:

Shortcut	Function
SUPER+H	Split window horizontally
SUPER+V	Split window vertically

Note that the window is not split instantaneously. You're just telling Sway "The next time I create a window, put it below/beside my current window."

You may also use *SUPER+W* to tell Sway to use tabs. You can switch your tab using the same shortcuts for switching between windows. You can end this function by pressing *SUPER+E*.

You can use *SUPER+ESC* to close the currently selected window.

5.2.2 Sway Config File

You can tailor Sway's behavior and keyboard shortcuts by editing the file `~/.config/sway/config` or one of the included files in the `~/.config/sway/config.d` directory.

All configuration options are documented in the manual page that you can access by typing `man 5 sway` in a terminal. More information is also available in the Sway Wiki: `https://github.com/swaywm/sway/wiki`

Some of the most important configuration options are explained in the following sections.

5.2.3 Keyboard Layout

The keyboard layout is normally configured by the MNT Reform Setup Wizard. Should you want to configure it manually, you can edit the `~/.config/sway/config.d/input` file. For example, the following snippet will change the layout to the EU layout for any connected keyboard:

```
input * {
  xkb_layout eu
  xkb_options lv3:ralt_switch
}
```

5.2.4 Trackball/Trackpad Speed

A common thing that people want to tune to their particular taste is the speed of the trackball (or trackpad) on MNT Reform. For Sway, you could add an `input` section (or extend the existing one) to the `~/.config/sway/config.d/input` file as such:

```
input * {
  accel_profile adaptive
  pointer_accel 1.0
}
```

Where `pointer_accel` can be a number between -1.0 and 1.0.

You can find out about all of the details of Sway's input configuration by opening its manual page using `man sway-input`.

5.2.5 External Displays

Some Processor Modules allow you to connect an external display on the HDMI port, but not all of them can drive both the internal and the external display at the same time. If your module supports dual display, plugging in an external monitor should just work. If you want to configure the placement and resolution of this monitor, take a look at `man sway-output` and create an `output HDMI-A-1` section in your Sway config file. Other helpful tools that you can install for these purposes are `kanshi` and `wlr-randr`.

You can also use `swaymsg` to control your displays on the fly or when pressing certain key combinations. The following example script will switch from internal to external display and force a standard 1080p mode:

```
#!/bin/sh
swaymsg output eDP-1 disable
swaymsg output HDMI-A-1 enable
swaymsg output HDMI-A-1 modeline 148.50 1920 2448 2492\
                                 2640 1080 1084 1089\
                                 1125 +hsync +vsync
```

5.3 Wayfire Specifics

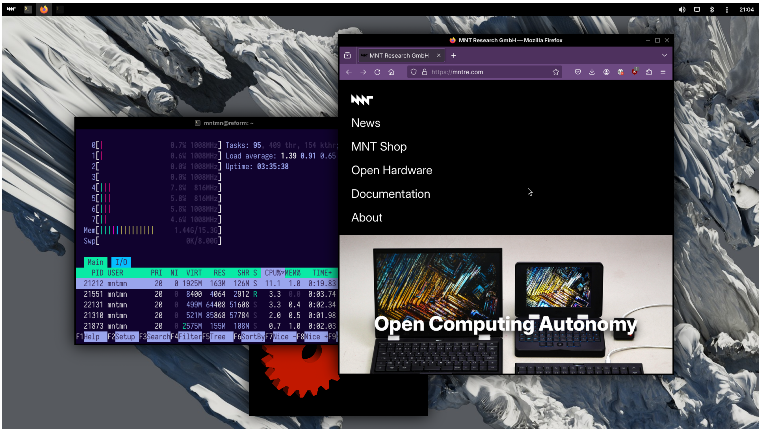
21:04
MNT Research GmbH — Mozilla Firefox
MNT Research GmbH
https://mntre.com
News
MNT Shop
Open Hardware
Documentation
About
Open Computing Autonomy
mntmn@reform: ~

```
   0[|                   0.7% 1008MHz] Tasks: 95, 409 thr, 154 kthr;
   1[|                   0.6% 1008MHz] Load average: 1.39 0.91 0.65
   2[                    0.0% 1008MHz] Uptime: 03:35:38
   3[                    0.0% 1008MHz]
   4[|||                 7.8%  816MHz]
   5[|||                 5.8%  816MHz]
   6[|||                 5.8% 1008MHz]
   7[||                  4.6% 1008MHz]
 Mem[|||||||||||||     1.44G/15.3G]
 Swp[                      0K/8.00G]

 Main  I/O
   PID USER       PRI  NI  VIRT   RES   SHR S  CPU%▽MEM%   TIME+
 21212 mntmn       20   0 1925M  163M  126M S  11.1  1.0  0:19.83
 21551 mntmn       20   0  8400  4064  2912 R   3.3  0.0  0:03.74
 22131 mntmn       20   0  499M 64408 51608 S   3.3  0.4  0:02.34
 21310 mntmn       20   0  521M 85868 57784 S   2.0  0.5  0:01.98
 21873 mntmn       20   0 2575M  155M  108M S   0.7  1.0  0:02.03
F1Help  F2Setup F3SearchF4FilterF5Tree  F6SortByF7Nice -F8Nice +F9
```

Wayfire supports a range of keyboard shortcuts to speed up working with the desktop:

Shortcut	Function
SUPER+← or →	Tile window to left or right
SUPER+↑ or ↓	(Un)maximize window
SUPER+TAB	Overview of all windows
ALT+TAB	Cycle through windows

5.3.1 Wayfire Config File

You can customize Wayfire in depth by editing the file:

`~/.config/wayfire.ini`

Some common configuration options are explained in the following sections.

5.3.2 Keyboard Layout

Wayfire's keyboard layout is normally configured by the MNT Reform Setup Wizard. Should you want to configure it manually, you can edit the file `~/.config/wayfire.ini`. Look for the line `xkb_layout` in the section `[input]`. For example, to change it to the “EurKEY” layout, change the value after the = sign to `eu`.

5.3.3 Trackball/Trackpad Speed

To change the speed of the trackball (or trackpad) cursor under Wayfire, look for the lines in the `[input]` section of `~/.config/wayfire.ini` that start with `touchpad`. To achieve a high acceleration speed, set the `touchpad_accel_profile` to `adaptive` and adjust the `touchpad_cursor_speed` value to `1.0` (it can be a number between `-1.0` and `1.0`).

You can learn all the details of Wayfire’s configuration in its wiki: `https://github.com/WayfireWM/wayfire/wiki`

5.4 Alternative Desktops

On MNT Reform, you are not restricted to Sway or Wayfire—you can also use other desktops.

You can choose an established desktop such as KDE Plasma and GNOME, or you can go down the rabbit hole of arcane desktops and discover a hidden gem this way.

We don’t ship either of the big desktops as they require a lot of resources and we want to keep our system minimalistic, but here is how you can install them yourself:

GNOME Command: `sudo apt install gnome`

KDE Plasma Command: `sudo apt install kde-plasma-desktop`

Chapter 6

Software

In the first edition of the handbook, we listed a number of free open source applications that had been tested and pre-installed on MNT Reform. While this was intended to add to the user experience, it also contributed to the system becoming a bit cluttered. Nowadays, we ship the system in a more minimalist form and give you the freedom to decide what to install. We still wanted the computer to be practical out of the box, so we included some essential tools that are listed in the following section. We also included a section about the so-called “Reform Tools”, which are Reform laptop specific helpers and scripts.

MNT Reform can run most Linux applications that are available for 64bit ARM-based computers (also called AArch64 or ARM64).

6.1 Preinstalled Software

Evince View PDFs and other documents.

Command: `evince`

`https://wiki.gnome.org/Apps/Evince`

Firefox Mozilla’s open-source web browser.

Command: `firefox`

`https://www.mozilla.org/firefox`

foot A terminal emulator that is fast, minimalistic and lightweight.

Command: `foot`

Keyboard shortcut: *SUPER+ENTER*

`https://codeberg.org/dnkl/foot`

GNOME Disks Partition, format, and manage internal and external disks.

Command: `gnome-disks`

`https://wiki.gnome.org/Apps/Disks`

Grim & Slurp Grim is a wayland-based screenshot tool, and Slurp lets you select the region of the screen you want to capture.

Command: `grim -g "$(slurp)"`

Keyboard shortcut: *SUPER+SHIFT+X*

`https://wayland.emersion.fr/grim`

htop A terminal-based look at system processes, CPU and memory usage.

Command: `htop`

`https://htop.dev`

micro An accessible, fresh terminal-based text editor.

Command: `micro`

`https://micro-editor.github.io/`

Minetest An 3D block-based open-world game focused on exploration, resource gathering, and construction.

Command: `minetest`

`https://minetest.net`

MPV A versatile, terminal-based media player.

Command: `mpv a-movie-file.mp4`

`https://mpv.io`

NCurses Disk Usage Terminal-based disk usage analysis utility.

Command: `ncdu`

`https://dev.yorhel.nl/ncdu`

Neverball This 3D game lets you guide a ball through 24 challenging levels.

Command: `neverball`

`https://neverball.org`

Sxiv A simple and fast image viewer.

Command: `sxiv`

`https://github.com/muennich/sxiv/`

Thunar Lightweight file manager.

Command: `thunar`

Keyboard shortcut: *SUPER+T*

`https://docs.xfce.org/xfce/thunar/start`

Vim The other major open text editor.

Command: `vim` (Exit by typing `:q` followed by *ENTER*)

`https://www.vim.org`

Wayland Event Viewer Useful when debugging input devices under wayland-based compositors such as Sway.

Command: `wev`

`https://git.sr.ht/~sircmpwn/wev`

Wayvnc Access your MNT Reform desktop remotely from VNC clients on other platforms using this server application.

Command: `wayvnc`

`https://github.com/any1/wayvnc`

wf-recorder Record MP4 video of your desktop with this program.

Command: `wf-recorder` (Stop with *CTRL+C*. The resulting video is named “recording.mp4”)

`https://github.com/ammen99/wf-recorder`

6.2 Updating Software

We recommend updating your software on a regular basis as bugs get fixed, new features are introduced and improvements are made. For this purpose, Debian has an integrated package manager called `apt`. You can stay up to date by executing the following command: `sudo apt update`. This will show you how many packages can be updated. You can either update individual packages or everything at once with one command: `sudo apt upgrade`.

6.3 Flashing the System Image

If your SD card is broken or you want to set up a new system (for example when upgrading to a new Processor Module), you can download the “System Image” from: `https://mnt.re/system-image`

First of all, back up all your important data! The following process will erase everything that is on the SD card you decide to flash.

From the link above, download the file whose name matches the Processor Module in your MNT Reform:

Processor Module	Filename
NXP i.MX8MQ	`reform-system-imx8mq.img.gz`
NXP i.MX8MPlus	`reform-system-imx8mp.img.gz`
NXP LS1028A	`reform-system-ls1028a.img.gz`
RCM4 with BPi CM4/A311D	`reform-system-a311d.img.gz`
Rockchip RK3588	`reform-system-rk3588.img.gz`

Unzip the image using gunzip (substitute your actual image file name, also in the following steps):

```
gunzip reform-system-imx8mq.img.gz
```

Identify the device name of your SD card. For example, you can check the output of `lsblk` before and after you insert the card and compare which new device appears. Below we use the device sdX, but it will be a different one on your computer.

Copy the image to your SD card **(Warning: all data on the SD card will be erased!)**:

```
sudo dd if=reform-system-imx8mq.img of=/dev/sdX \
        bs=8M status=progress
```

That's it—now you can boot your Reform from the freshly flashed SD card.

As new modules become available, you can refer to our online guide: `https://source.mnt.re/reform/reform-system-image#downloading-and-flashing-a-system-image`

6.4 Reform Tools

We have our own Debian package called `reform-tools`. These tools are designed to automate otherwise tedious system configuration tasks, so we encourage you to check them out.

Command	Function
`reform-check`	Tries to analyze what's wrong with your OS.
`reform-display-config`	This tool configures single and dual display mode. Only supported with i.MX8MQ.
`reform-flash-uboot`	This updates the bootloader (rarely needed).
`reform-help`	Shows you a list of useful commands.
`reform-migrate`	Helps you with OS migration from SD card to NVME or eMMC flash.

More information about reform-tools: `https://source.mnt.re/reform/reform-tools`

6.5 Binary (In)compatibility

A popular architecture for computers is x86-64 (a.k.a. AMD64). Binaries compiled for this architecture are incompatible with ARM processors. If you want to use binary software, you have to make sure that it is built for AArch64. The vast majority of open-source software is available for AArch64, but there can be subtle problems when x86 is implicitly expected, for example:

- Optimizations written in assembler (machine code), targeting specific SIMD/vector instructions
- JIT (just-in-time) compilers

Generally, instead of using inline assembler or targeting a single architecture directly, use cross-platform libraries and code-emitting backends.

6.6 Running x86 Software

Until RISC architecture will change everything, many games and proprietary closed-source applications are only available as x86 or x86-64 binaries. If you need to run such a binary, you can try binary translators such as `box64` (available in `apt`) or `DEX`:

```
box64 ./my-game
```

You can even run some Microsoft Windows applications on MNT Reform by chaining `box64` and `wine`, which is a Linux compatibility layer for Windows binaries:

```
box64 wine64 ./my-game
```

Emulating 32-bit x86 binaries is a bit more complicated, but possible on a 64-bit ARM platform. You can leverage Debian's "multiarch" feature to add the `armhf` architecture to your system and install `box86` (`box64`'s 32-bit sibling) this way. For troubleshooting such setups, don't hesitate to get in touch with the MNT Community.

6.7 GPU Hacks

At the time of writing, most MNT Reform Processor Modules are based on ARM System-on-Chips that contain a GPU meant for mobile or "embedded" use. Multiple factors define the limits of the versions of OpenGL, OpenGL ES and Vulkan APIs that software can use on MNT Reform: for example, the space- or energy-saving architecture of these GPUs, or the capabilities of the often reverse-engineered open-source drivers such as `etnaviv` or `panfrost`.

Sometimes, graphics heavy applications or 3D games are written with large and power hungry desktop GPUs in mind and require a GL or Vulkan version that is out of reach of your device. In some cases the developers do not really require the features available for higher OpenGL versions, though, and you can try to work around the limitation by pretending that your system supports a higher version than it really does. To do this, you can set the following environment variables in a terminal and then launch your application or game from this same terminal:

```
export MESA_GL_VERSION_OVERRIDE=4.2
export MESA_GLSL_VERSION_OVERRIDE=420
my-game
```

If this fails, you can always fall back to software emulation of OpenGL, which will be slow but sometimes usable:

```
export LIBGL_ALWAYS_SOFTWARE=1
my-game
```

Mesa is the collection of Linux 3D graphics drivers. You can learn more about various Mesa environment variables at `https://docs.mesa3d.org/envvars`

Chapter 7

Hardware

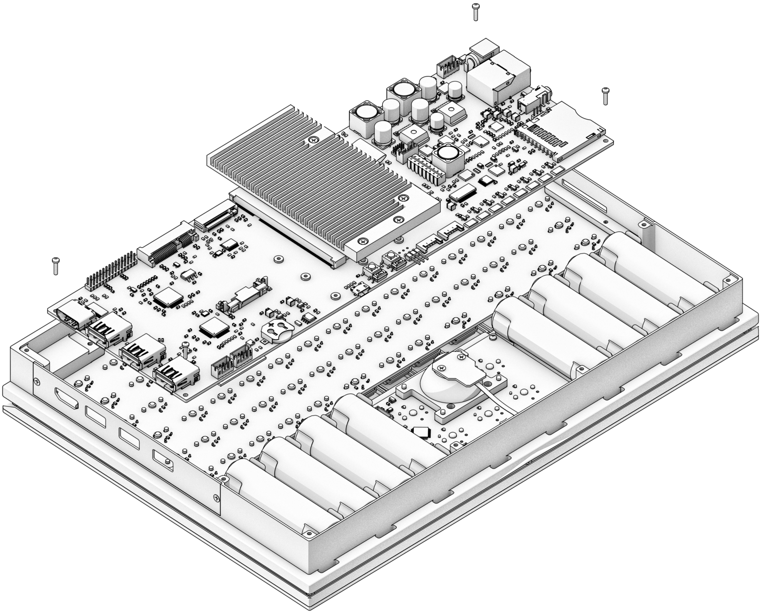

7.1 Case Parts

The case consists of the following 5 parts. All parts except the Bottom Plate are milled from sand-blasted and anodized 6061 aluminum.

1. **Main Box:** the chassis of MNT Reform. All PCBs (printed circuit boards) are attached to it via screws: The keyboard from the top and motherboard, trackball/trackpad, and battery boards from the bottom. The lower half of the hinges and the system controller OLED PCB are mounted from the top as well.
2. **Keyboard Frame:** a thin rectangle that covers the sides of the keyboard and the system controller OLED
3. **Screen Back:** houses the display and upper half of hinges
4. **Screen Front:** houses speakers and providing display bezel
5. **Bottom Plate:** the clear acrylic plate that closes the laptop from the bottom

For easy (dis)assembly, Reform uses M2 screws with Phillips-head everywhere—with one exception: M4×5 on the top half of the hinges.

7.1.1 Main Box

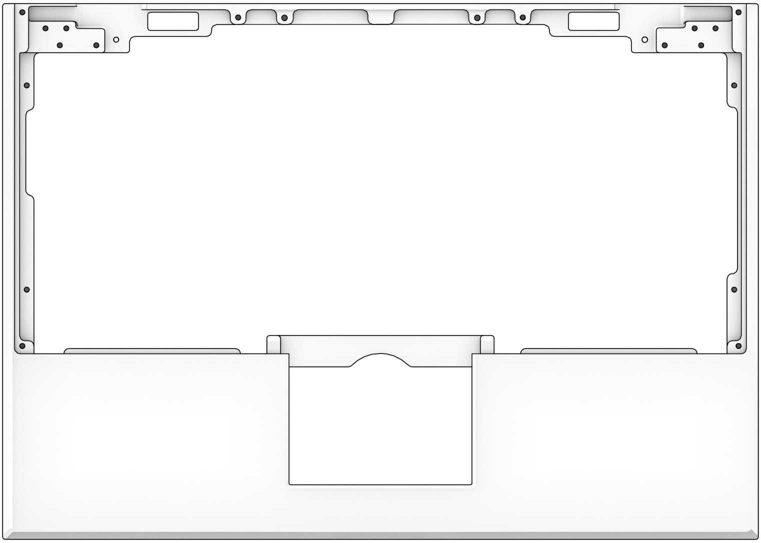

The Main Box houses most of the electronics:

- Motherboard, exposing ports through openings on the left and right
- Two LiFePO4 battery packs, connecting to the motherboard via Molex PicoLock cables
- Keyboard, connecting to the motherboard via two JST-PH cables
- OLED display, connecting to the keyboard via a 4-pin 1mm pitch flex cable
- Trackball or Trackpad, connecting to the motherboard via one JST-PH cable

The Main Box features four neodymium bar magnets inserted into slots below the front edge. These match with their counterparts in the Screen Front.

7.1.2 Keyboard Frame

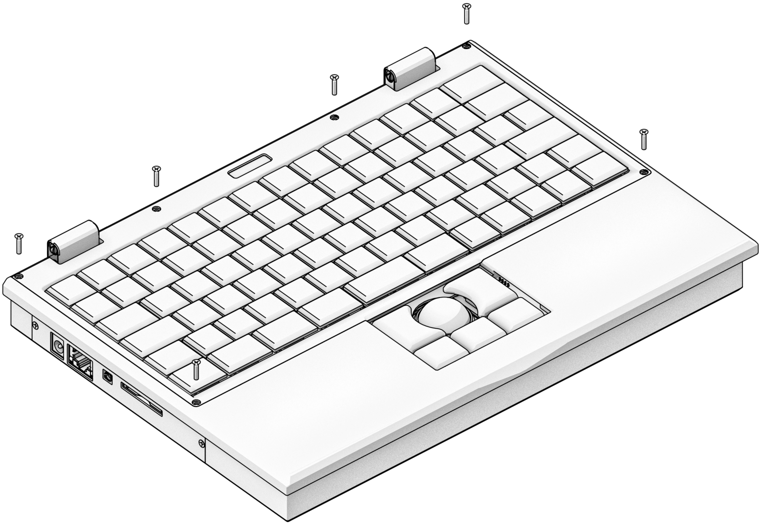

The Keyboard Frame is inserted into the Main Box. It has four tabs on the front that must be inserted first. The frame is mounted with six black M2×5 countersunk screws.

7.1.3 Screen Back

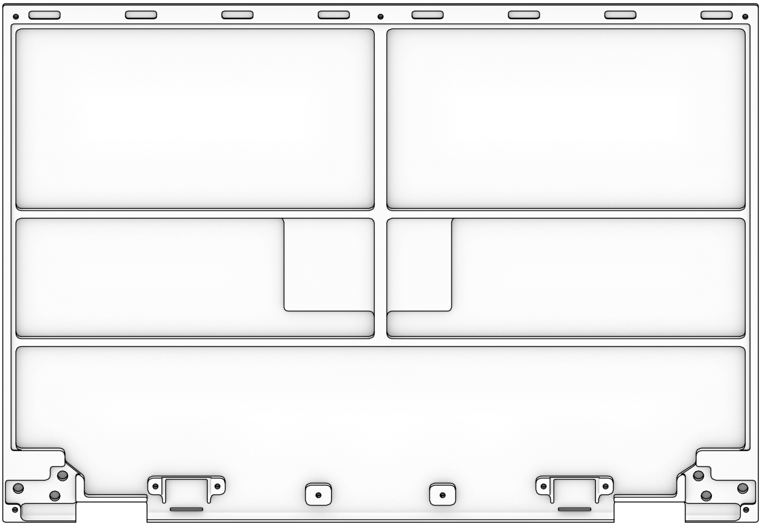

The eDP display panel rests in the Screen Back. The left and right hinges are mounted in the bottom left and right corners with three M4×5 countersunk screws each. Note that the hinge labeled “SMS-ZZ-219-L” goes on the right side, and the hinge labeled “SMS-ZZ-219-R” goes on the left side. The other half of each hinge is mounted to the Main Box with four M2×6 countersunk screws.

Four neodymium magnets are mounted along the top edge of the Screen Back. These, together with their counterparts in the Main Box, hold the laptop shut when closed.

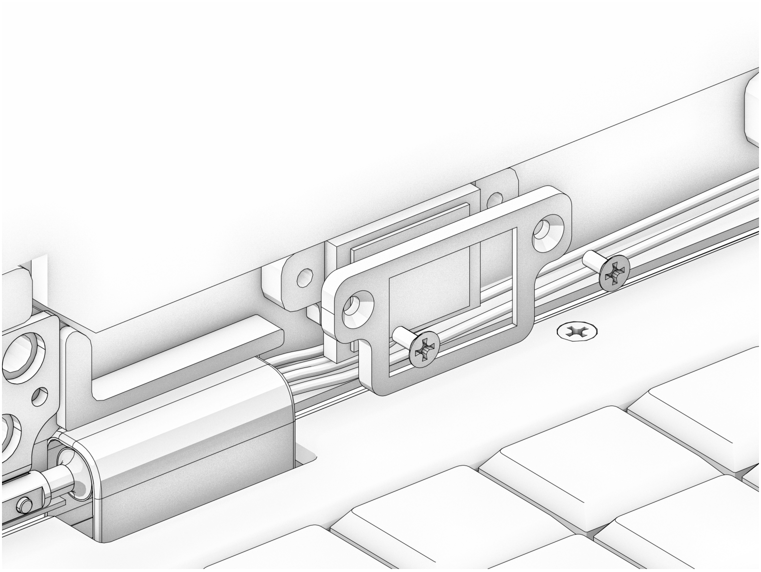

The stereo speakers are mounted below the display and secured with the speaker holders. Each holder is mounted with two black M2×5 countersunk screws. Both speaker and display cable are fed through a cutout in the hinge and into the Main Box.

7.1.4 Screen Front

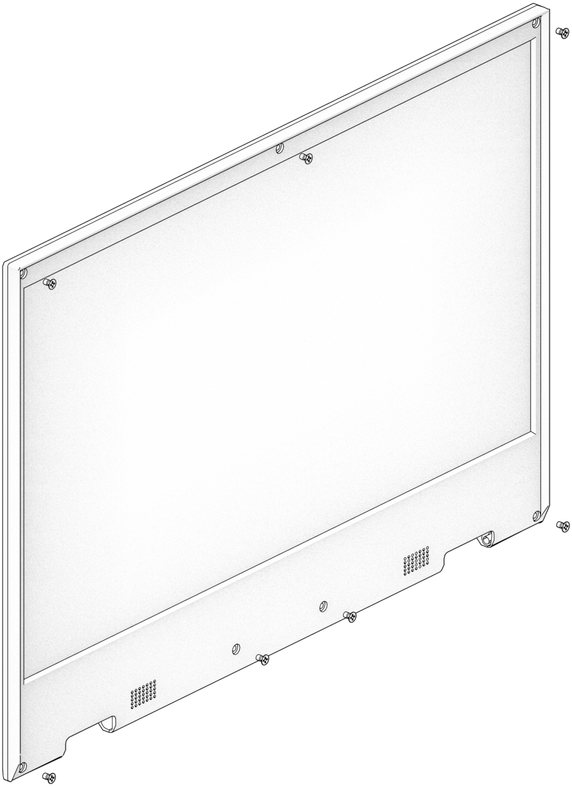

This part serves as a bezel for the display. It is mounted with seven black M2×5 countersunk screws to the Screen Back.

7.1.5 Bottom Plate

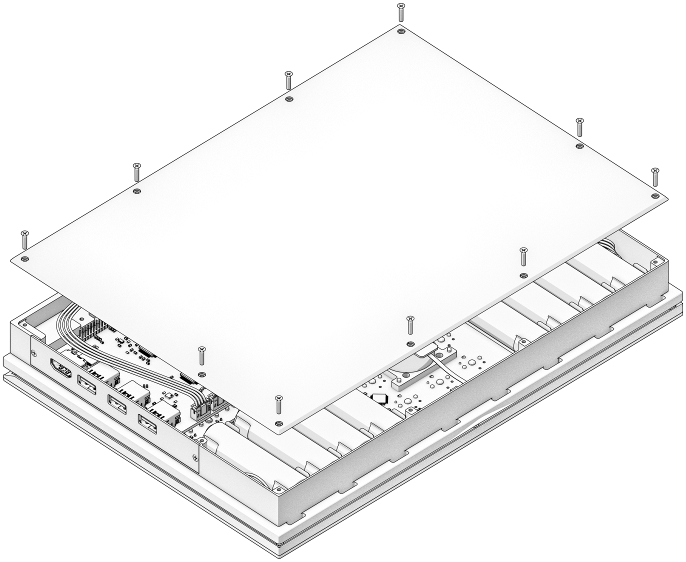

The Bottom Plate closes the Main Box from the bottom with ten M2×6 countersunk screws.

7.1.6 Port Covers

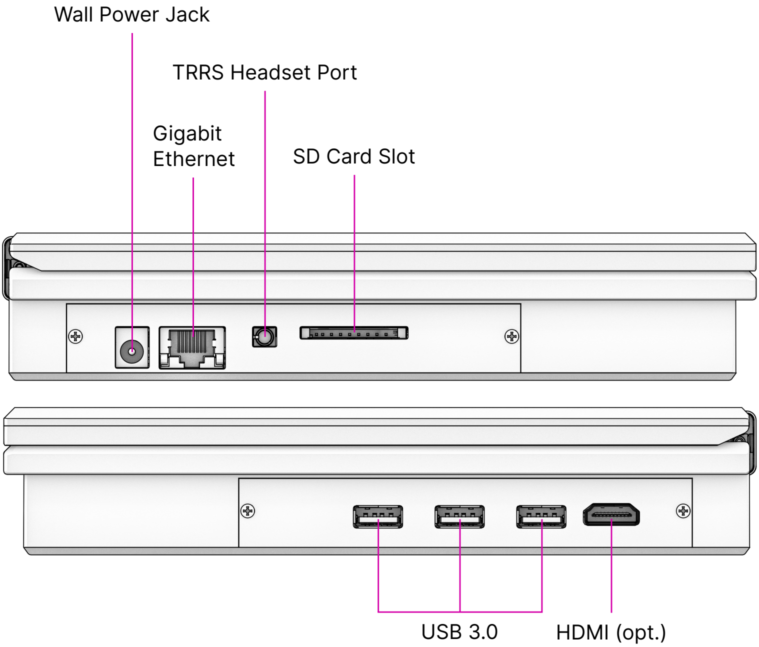
Wall Power Jack
TRRS Headset Port
Gigabit Ethernet
SD Card Slot
USB 3.0
HDMI (opt.)

The Port Covers are two pieces of powder coated steel that cover the side openings of the Main Box (mounted with two black M2×5 screws each). You can exchange these to fit a future motherboard or an expansion that requires a different port layout.

7.2 Motherboard

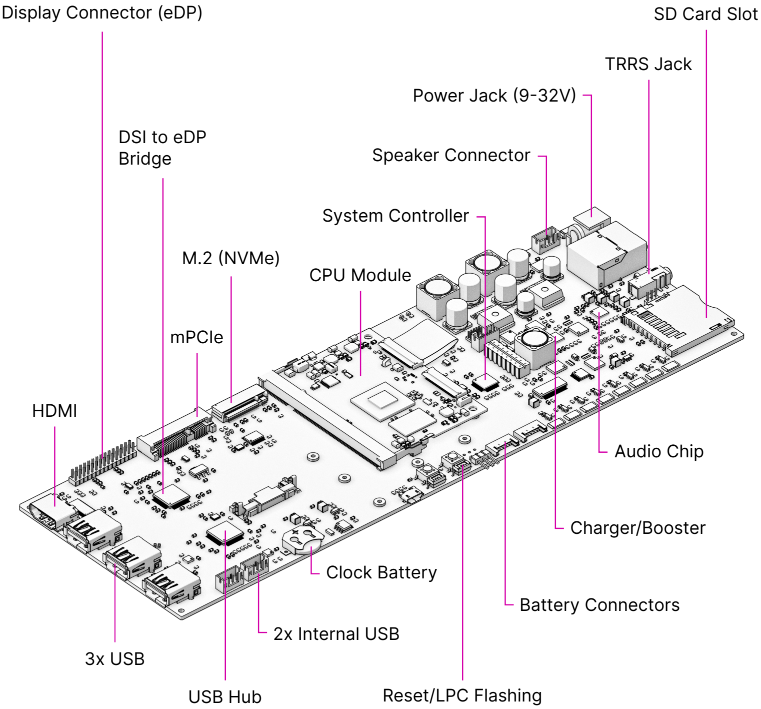
Display Connector (eDP)
SD Card Slot
TRRS Jack
Power Jack (9-32V)
DSI to eDP Bridge
Speaker Connector
System Controller
M.2 (NVMe)
CPU Module
mPCIe
HDMI
Audio Chip
Charger/Booster
Clock Battery
Battery Connectors
2x Internal USB
3x USB
USB Hub
Reset/LPC Flashing

The Motherboard spans the inner width of the device and has outward-facing ports on both sides. It is mounted to the Main Box with four M2×4 pan head screws. The Motherboard has the following main features:

- **Power system:** based on the LTC4020 buck/boost converter, it regulates charging of the LiFePO4 batteries and seamlessly switches between wall and battery power.
- **System controller:** coupled to the power system, an NXP LPC11U24 Cortex-M0 MCU controls an analog monitor chip for the eight battery cells as well as the charger. It is connected to the Processor Module via SPI, and has GPIO lines to the main power rail switchers in

the system. It has a UART (SYSCTL) that the keyboard can talk to directly for issuing power on/off commands and battery status queries.

- **DSI to eDP bridge:** The SN65DSI86 chip converts the MIPI-DSI output from the Processor Module to an embedded DisplayPort (eDP) signal that the display panel can understand. Some Processor Modules don't make use of this chip, because they can output eDP directly (like the LS1028A) or use an internal HDMI to eDP adapter instead. Please refer to your Processor Module's manual for the details.
- **USB 3.0 hub:** The Processor Modules themselves have two USB ports. To provide for a total of five USB ports (two internal and three external), there is a TUSB8040 USB hub chip on the motherboard that provides the extra ports. USB load switches on each external port protect the system from too much current draw.
- **Sound chip:** A Wolfson/Cirrus WM8960 audio DAC (digital-to-analog converter)/amplifier interfaces to the headphone/microphone jack and powers two speakers housed below the main display.
- **mPCIe slot:** An mPCIe connector that you can use for expansions like a Wi-Fi card or for an NVMe SSD using an M.2 adapter.
- **M.2 slot:** An NGFF slot (Key M) that can either house an NVMe SSD (solid state disk), or with the LS1028A module, a SATA SSD. With some other Processor Modules, this port is inactive (refer to the Processor Module's manual).

7.2.1 Revised Versions

At the time of writing, 2.5 is the latest motherboard version. It is a revised version of the 2.0 Reform motherboard, and it is compatible with all our Processor Modules. We fixed some bugs with the initial design and switched parts out based on availability. The main improvements are:

- Lowered headphone lowcut filter for improved bass response
- Replaced Micro-USB with USB-C as the LPC flashing connector
- Lowered power LED brightness
- Fixed current leak through balancing circuit that could bypass missing cells
- Fixed main buck converter enable behavior under low voltage condition
- Fixed charger control circuit that previously required a factory resistor bodge

7.2.2 System Controller

Independent from the main Processor Module, a low-power processor sits on MNT Reform's motherboard. The NXP LPC11U24 is a 32-bit ARM Cortex-M0 processor that uses very little power and is always on as long as there is battery or wall power present. We call this processor the System Controller.

The System Controller runs a program in an endless loop that has the following jobs:

- Powering the individual voltage rails of the system on and off
- Hard resetting the main processor on demand
- Monitoring the voltage of each battery cell
- Balancing battery cells. If a cell is overvolted, charging is halted and the overvolted cells are discharged until they are back to a nominal voltage
- Turning off the system if battery cells are undervolted

- Reporting total current flowing in and out of the batteries
- Turning charge current on or off

Your main way of communicating with the System Controller is with the Keyboard. The Keyboard has, aside from its USB connection to the main processor, a second serial (UART) connection/cable to the motherboard's SYSCTL port. A 57600 bps connection is always established between the Keyboard and the System Controller.

It accepts commands in the form of a single letter followed by carriage return (`0x0d`). A command can also be prefixed with a single argument, a positive integer of up to 4 digits. The most important commands are:

Command	Function
1p	Turn the computer on
0p	Turn the computer off
a	Get current flowing into/out of batteries in mA
v	Get cell voltage statistics
V	Get combined battery voltage
s	Get System Controller state (a message string)
g	Get estimated "fuel gauge" of batteries (percentage)

The individual cell voltages are measured by the Battery Monitor LTC6803IG-4#PBF and reported via SPI to the System Controller. The total voltage and current are measured by the INA260 chip and reported via I²C.

To understand the available commands in more detail, you can take a look at the System Controller's `handle_commands()` function.

The System Controller is connected to the Processor Module through a SPI interface and through an auxiliary UART. The System Image ships with a kernel module called `reform2-lpc` which makes battery information available to the OS. The source code for this module is available in the reform2-lpc-driver directory of the Reform repository.

7.2.3 Flashing the Firmware

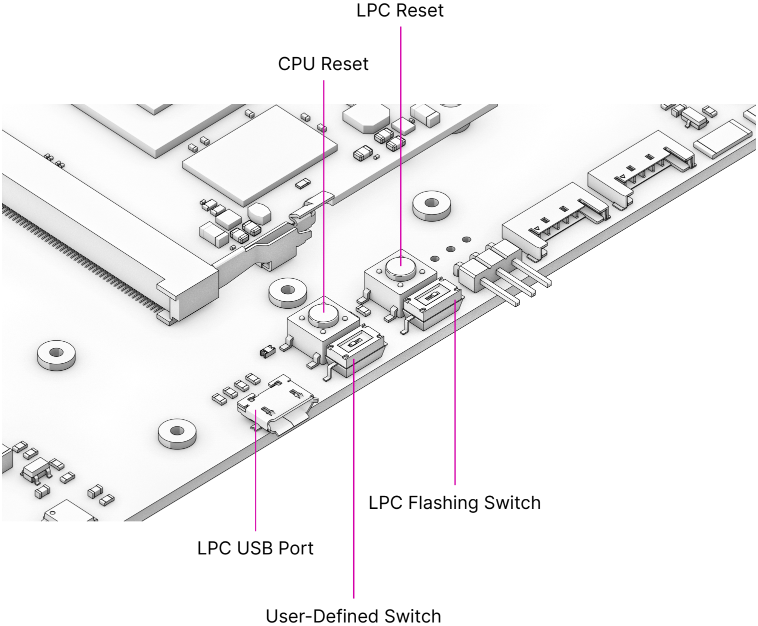
LPC Reset
CPU Reset
LPC Flashing Switch
LPC USB Port
User-Defined Switch

To update (flash) the firmware of the System Controller, you need another computer and a USB-C cable (or, if you have a motherboard older than version 2.5, a Micro-USB cable).

You can find the source code of the firmware and a script that guides you through the flashing process in MNT Reform's source folder reform2-lpc-fw.

On your other computer, execute the following commands:

```
git clone https://source.mnt.re/reform/reform
cd reform/reform2-lpc-fw
./download-fw.sh 25_R2 # or 20_R3 if you have a
                       # 2.0 motherboard
```

```
                        # (with Micro-USB connector)
sudo ./flash.sh
```

The `flash.sh` script will interactively guide you through the necessary steps. These are:

1. Open MNT Reform's lid and remove the batteries.
2. Connect the power brick. Be very careful to avoid shorts from this point on.
3. Set DIP switch *LPCPROG* (LPC Flashing Switch) on MNT Reform's motherboard to "ON".
4. Press button *LPCRESET*.
5. Connect USB-C (or Micro-USB) cable between MNT Reform's motherboard and your other computer.
6. System Controller's memory appears as a virtual flash drive. The `flash.sh` script will recognize it and copy the `firmware.bin` to this virtual drive.
7. Unplug the USB-C or Micro-USB cable.
8. Set DIP switch *LPCPROG* (LPC Flashing Switch) to "OFF" (labelled "1" on the switch).
9. Press button *LPCRESET*.
10. Disconnect the power brick and reassemble your MNT Reform.

Alternatively, you can build the firmware yourself. Please follow the instructions in the `README.md` file to do so.

7.2.4 Expansion Port

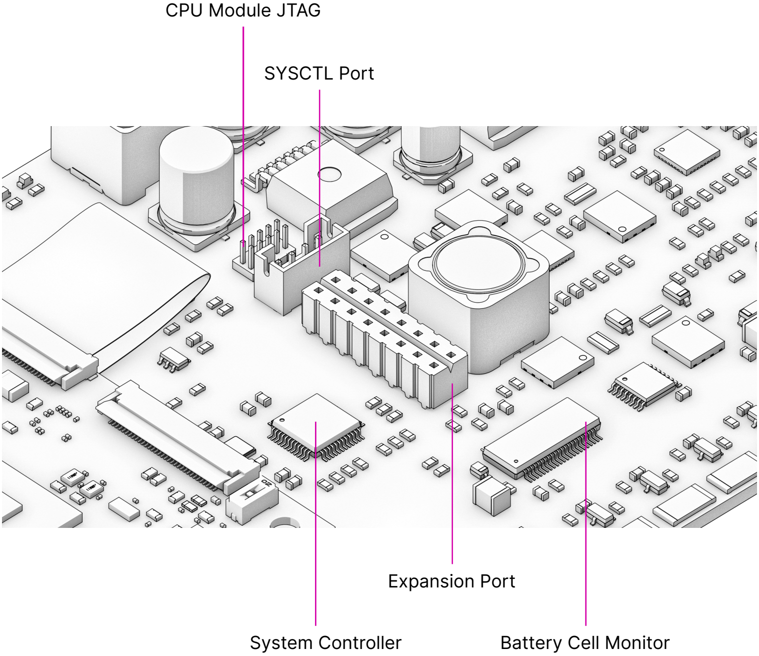
CPU Module JTAG
SYSCTL Port
Expansion Port
System Controller
Battery Cell Monitor

The Expansion Port U18, labeled “Hack the Planet” is meant for advanced users that want to connect sensors or other peripherals to MNT Reform’s system controller. Please note that changing the system controller’s program can disrupt the battery charging control loop, potentially causing over- or undercharged cells, resulting in physical damage and/or injury. **Experiment with the system controller only if you know exactly what you’re doing and at your own risk.**

The Expansion Port features an SPI interface, two analog-digital converters, a UART, JTAG and 3.3V Power. All non-power pins can alternatively be used as GPIOs.

The following LPC11U24 pins are available at the port:

Pin	Function	Pin	Function
16	GND	15	3.3V
14	MOSI1a	13	USBCON#
12	RXDa	11	TXDa
10	AD7	9	SCLKa
8	SWDIO	7	AD5
6	TDO	5	TRST#
4	TDI	3	TMS
2	MISO1a	1	SCK0b

Refer to the motherboard schematic's *Power* section and the NXP LPC11U24 reference manual for further details.

7.2.5 mPCIe Socket

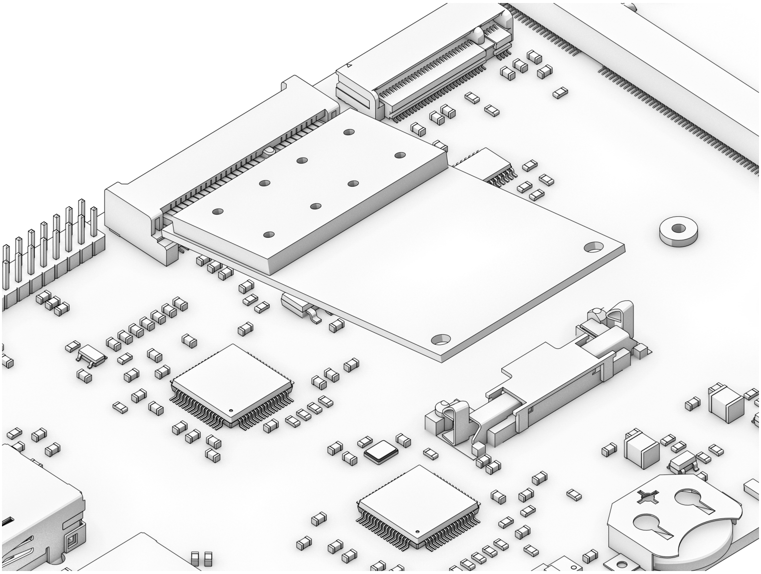

All Processor Modules feature at least one PCIe controller which is connected to the mPCIe socket U11. The standard use for the mPCIe port is a WiFi card or an NVMe SSD (with M.2 adapter). To install a card, plug it into the socket at an angle and then press down the opposing side into the latch. To remove the card, just pull on the two protruding metal springs of the latch and the card will pop out.

The reference clock of the mPCIe slot is provided by the Processor Module.

7.2.6 M.2 Socket (Key M)

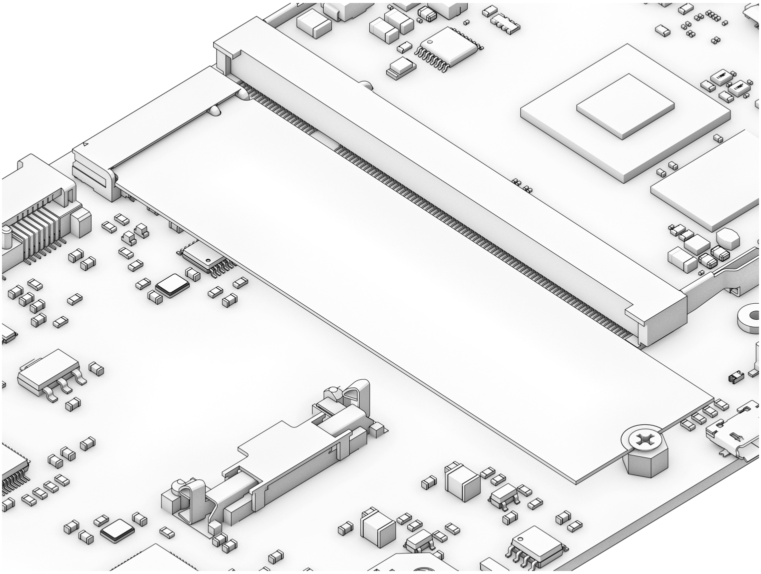

Some Processor Modules, such as the original i.MX8M module and the RCORE with RK3588, feature a second PCIe controller—or in the case of LS1028A, a SATA controller—which is connected to the M.2 socket (J10). The standard use for the port is to install an M.2 NVMe solid state drive. Plug the SSD disk into the socket and fix it with an M2 screw to one of the three mounting holes that corresponds to the module's size.

The reference clock for the port is generated by U23 on the motherboard.

7.3 Processor Module

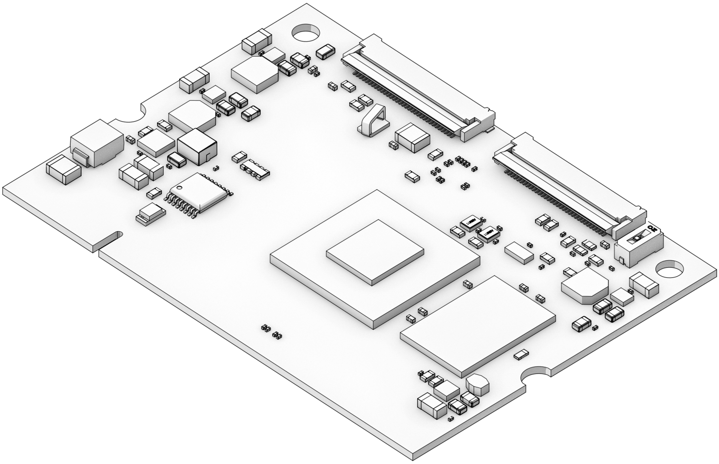

When the first edition of this handbook was released, we had only one Processor Module to offer. Now, nearly four years later, there are several of them, each with different features to accommodate individual preferences. We are constantly developing new modules for Reform, the latest drop being RCORE with RK3588—a powerful Processor Module that gives you 4x performant ARM Cortex-A76 cores, 4x power-efficient ARM Cortex-A55 cores, and up to 32 GB RAM.

The Processor Module is plugged into motherboard connector U1 which has 200 pins. If you want to learn more about Reform's Processor Modules, take a look at the schematics and source KiCad projects in our GitLab repository.

If you want to develop your own Processor Module, visit `https://source.mnt.re/reform/reform-som-template` for a KiCad template and more technical information.

7.3.1 Display Connector

The default display in MNT Reform conforms to the eDP (embedded DisplayPort) standard. Some Processor Modules, such as i.MX8M and RCM4, output a MIPI-DSI signal on its flex connector that is fed into the J24 connector on the motherboard using the 30 pin, 0.5mm pitch flex cable. The SN65DSI86 chip on the motherboard converts the MIPI-DSI signal to eDP. If you use a different Processor Module that outputs eDP directly, the J24 connection is skipped. Refer to the manual of your module instead.

7.4 Heatsink

The heatsink is a piece of milled aluminum that connects to the silicon die of the main SoC on the Processor Module, with a thermal pad applied on the die. The heatsink is fixed to the motherboard by four M2×12 screws. The screws are supported by four metal or plastic spacers.

7.5 Keyboard

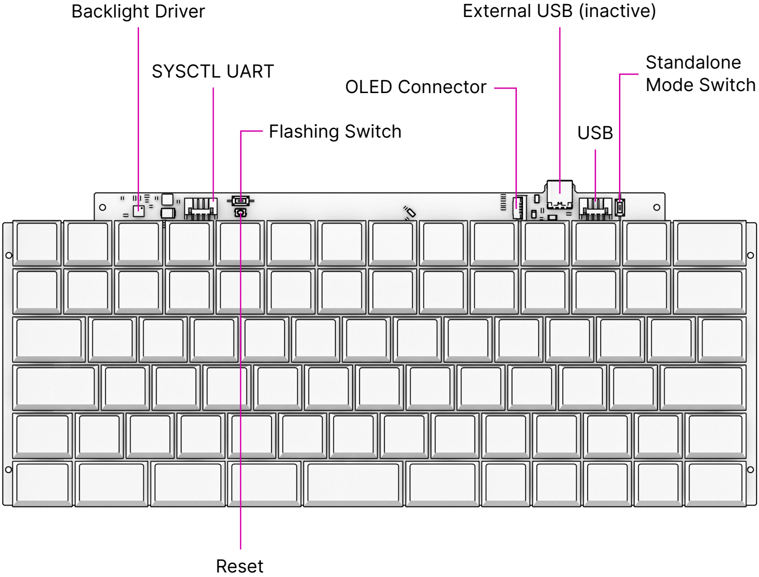
Backlight Driver
SYSCTL UART
Flashing Switch
OLED Connector
External USB (inactive)
USB
Standalone Mode Switch
Reset

The keyboard is mounted to the top of the Main Box with six M2×4 pan head screws. It is powered by an ATmega32U4 8-bit microcontroller. The controller scans the row/column matrix of keyswitches and reports key presses via USB HID (human interface device) to the motherboard. Each switch has a diode to prevent ghosting, so you can press multiple keys at once. The microcontroller runs a firmware based on LUFA, which is an open source library for implementing USB input devices.

The second role of the keyboard is to serve as a user interface to the LPC system controller on the motherboard, even when the main SoC is turned off. To make this possible, the keyboard connects via a separate UART cable to the motherboards SYSCTL header (J23).

The keyboard can also be taken out of the laptop and used as a standalone USB-C device. To enable this function, turn on the *STANDALONE* switch near the top right corner. When using the keyboard in the laptop, this switch has to be turned off.

7.5.1 Keyboard Firmware

You can find the MNT Reform keyboard firmware in the source folder reform2-keyboard-fw.

You can update the firmware of the keyboard on MNT Reform itself, but make sure to read this section in full to avoid ending up in a situation where you have to disassemble the laptop. The full procedure to download and flash the firmware is as follows (in a terminal window):

```
git clone https://source.mnt.re/reform/reform
cd reform/reform2-keyboard-fw
./download-fw.sh 3_US # or 3 if you have a
                      # non-US keyboard
                      # or 2 if you have an
                      # older pre-V3 keyboard
sudo ./flash.sh
```

The `flash.sh` script will walk you through the necessary steps.

To be able to flash the firmware to the keyboard, its microcontroller has to be in a special programming mode where it identifies as an “Atmel DFU bootloader” USB device. Since the 3.0 revision of the Keyboard, you can put it in programming mode by pressing the *Circle* key followed by the *X* key. Note that you won’t be able to use the keyboard for typing after this step–so if you’re flashing the keyboard inside of the laptop and something goes wrong, you’ll need another external USB keyboard to continue the process. So only do this when the flashing script asks you to do so.

To modify the scancodes of individual keys (i.e. to swap keys on the firmware level), you can edit the file `matrix.h` and rebuild the firmware by typing the “make” command in a terminal. Please refer to the `README.md` for more details.

7.5.2 Backlight

Most keys have a white light emitting diode (LED) to illuminate the transparent part of the keycaps, making the laser engraved letters visible in darkness. You can control the backlight's brightness via *Circle* followed by *F1* or *F2*, or use the OLED menu.

7.5.3 Replacing a Keycap

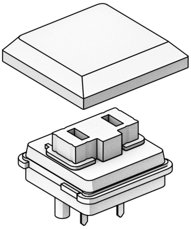

MNT Reform comes with custom *MBK Choc Glow* keycaps by FKcaps, but you can use any keycaps compatible with Kailh Choc keyswitches. You can pull out individual keycaps with your fingernails—or better, using a keycap puller—and swap them around.

7.5.4 Replacing a Keyswitch

Should a keyswitch ever break, you can replace it with Kailh Choc Brown (CPG135001D02) or Kailh Choc White (CPG135001D03).

The best way to desolder the switch is a desoldering gun. If you don't have one, use a soldering iron and solder wick to remove the solder of one pin. Try to pull out the corresponding side of the switch from the top while continuing to heat the pin. Repeat the same for the other pin and go back and forth until you can remove the switch.

7.6 OLED Module

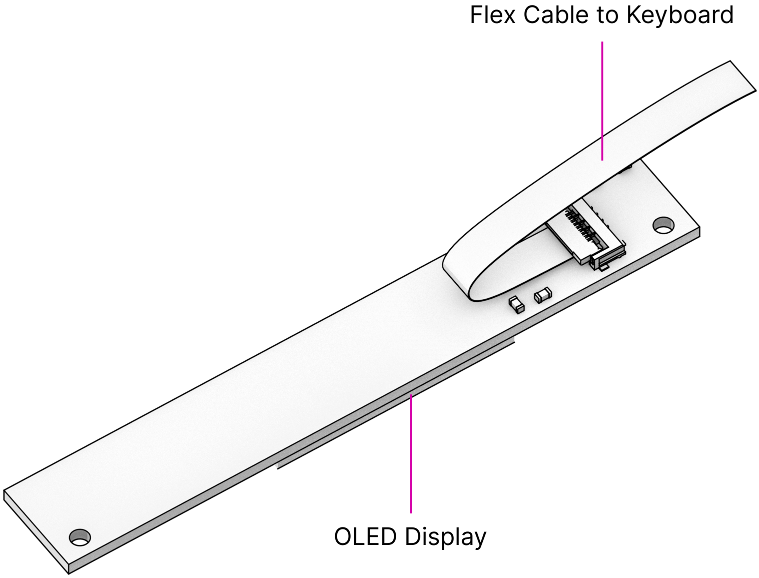

The OLED display sits on the OLED Module which is connected to the keyboard through a 4-pin, 1mm pitch flex cable. The communication protocol is I²C. The module is mounted in the Main Box on top of the keyboard with two M2×4 pan head screws.

If you're feeling creative and want to customize your OLED with text, images or even animations, we've got you covered. Check the MNT Reform source repository and navigate to the reform2-keyboard-fw/kbdgfx-demo directory. This directory contains example code that serves as a starting point for developing your own custom OLED graphics.

7.7 Trackball

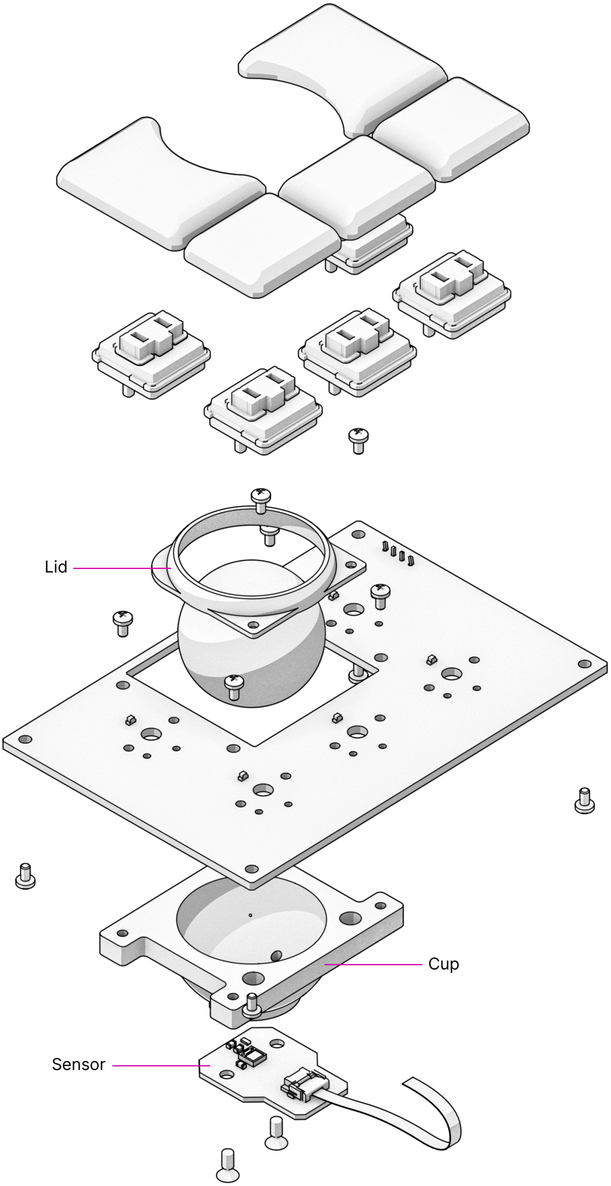
Lid
Cup
Sensor

The trackball uses an RP2040 microcontroller to convert X and Y movement coordinates from the PAT9125EL optical sensor that is connected via I^2C to the USB HID Mouse protocol. The electronic connection between trackball sensor and controller is made with a 6-pin 0.5mm pitch flex cable.

The trackball has five buttons. These make use of the same keyswitches as the keyboard: Kailh Choc Brown (CPG135001D02). The button caps are 3D printed using SLA resin technology. If you want to substitute your own replacements, you can find the STL files for the caps in the MNT Reform source repository. The cup and lid of the trackball are 3D printed using the same method.

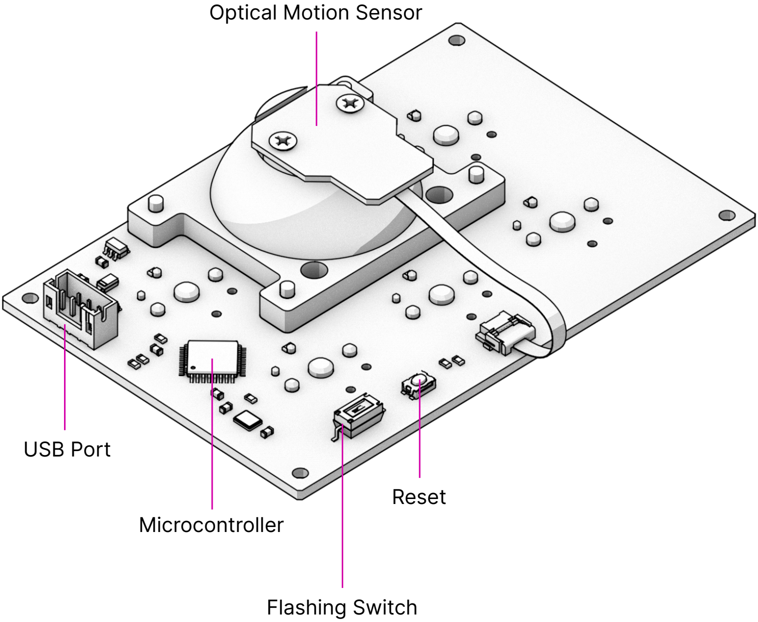

7.7.1 Trackball Cleaning

From time to time, you should clean dust and debris from the trackball. To do this, carefully lift off the left and right buttons. Then, unscrew the two screws holding the trackball's lid and remove the ball. Clean the inside of the cup with a soft cloth. Don't use detergents as these can dissolve the cup's material.

7.7.2 Trackball Firmware

You can find the trackball firmware in the source folder reform2-trackball2-fw, except if you have an older version of the trackball that uses an ATmega32U2 controller instead of a RP2040. The older versions firmware is in the reform2-trackball-fw directory. Please refer to its `README.md` file for building and flashing information.

The current version of the trackball can be flashed using `picotool`. At the time of writing, `picotool` is not available as a Debian package, so you have to build it yourself. You can use the included convenience script to do that:

```
./install-picotool.sh
```

Then you are ready to download and flash the firmware:

```
./download-fw.sh
./flash.sh
```

If you want to modify the behavior of the trackball, refer to the `README.md` file in the firmware directory.

7.8 Trackpad

The trackpad integrates an Azoteq TPS65-201 capacitive sensor which reports coordinates to the microcontroller via the SPI protocol.

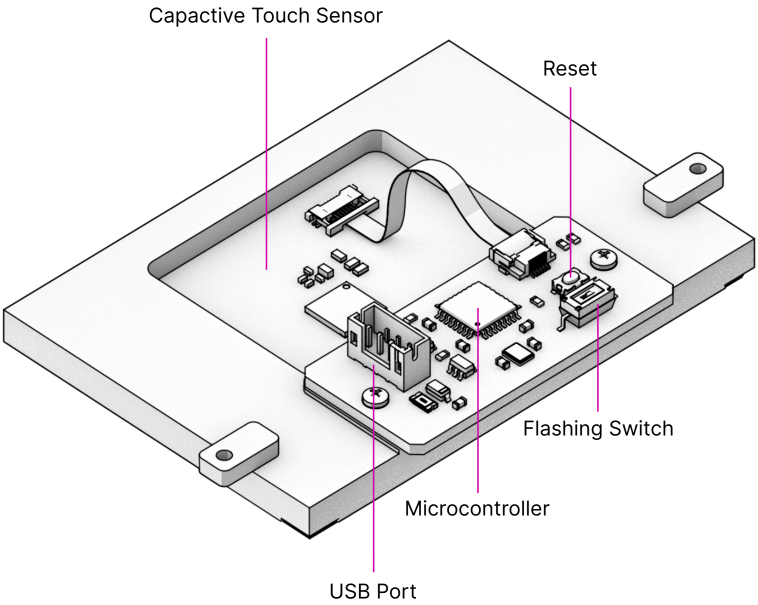

7.8.1 Trackpad Firmware

You can find the trackpad firmware in the source folder reform2-trackpad-fw.

Same as the keyboard, the trackpad firmware is based on the LUFA USB device library and implements a USB HID Mouse.

To update the firmware, the MCU has to be in bootloader USB mode. If you have a recent enough trackpad firmware, the flashing script can put it in this mode directly. If this doesn't work, you have to open your MNT Reform and toggle the programming DIP switch *SW7* on the trackpad to "ON" and press the reset button *SW6*. The trackpad will reappear as an "Atmel DFU bootloader USB" device. You can then download and flash new firmware by executing:

```
./download-fw.sh
./flash.sh
```

If you want to modify the behavior of the trackpad, refer to the `README.md` file in the firmware directory.

7.9 Exchanging Trackball and Trackpad

You can swap the Trackball for the Trackpad module and vice versa. To do this, first disconnect the wall power and flip MNT Reform on its back. Unscrew the Bottom Plate and remove all battery cells. Unplug the side of the internal USB cable that is connected to the installed module. Then, unscrew the module's case mounting screws (four M2×4 pan head screws for the Trackball, two M2×4 pan head screws for the Trackpad) and pull out the module.

Reverse the process to install the new input device. The Trackball is inserted so that its four mounting holes line up with four matching holes in the Main Box. The Trackpad slides into a slot in the Main Box with one end first (the end without mounting tabs) and is then mounted to the Main Box with two screws that go through the tabs on the other end. After mounting the desired module, reconnect the internal USB cable to it.

7.10 Battery Packs

MNT Reform has two identical battery packs, referred to as the Left and Right packs. Each pack holds four 18650 LiFePO4 cells (3.2V). The two packs are mounted to the Main Box with four M2×4 pan head screws for each battery pack. **You may be tempted to try cells of other chemistries like Li-Ion or NiMH, but never do this, as these are incompatible.**

Only use LiFePO4 cells with MNT Reform!

When inserting battery cells, make sure that the positive and negative poles are facing in the correct direction. The poles are marked on the silkscreen of the battery pack PCBs.

All 8 cells are connected in series. When fully charged at 3.6V, the total voltage of the cells can add up to 28.8V. **Make**

sure not to bridge/short any battery clips to the case or neighboring clips or pins, as this will immediately cause sparks and burnt traces.

Remove all battery cells before doing any work inside MNT Reform to prevent damage from accidental discharge.

LiFePO4 cells are safely discharged to 2.5V. Please make sure not to discharge the cells further. Since 2022, MNT Reform ships with protected battery boards. These allow you to leave your MNT Reform turned off/uncharged for as long as you need.

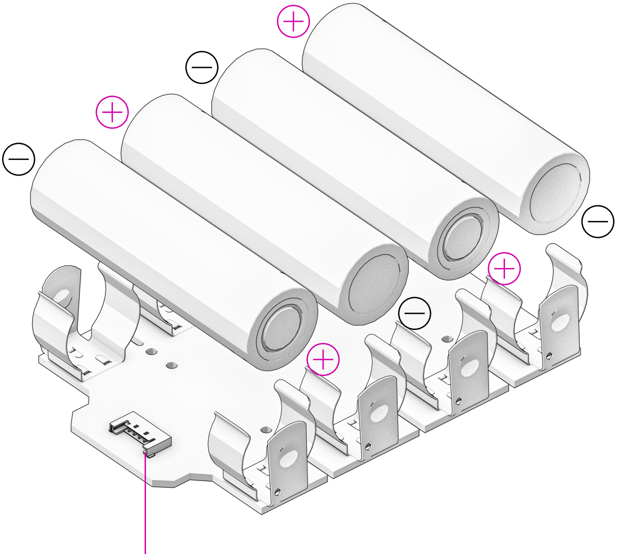

7.10.1 Compatible Battery Cells

The following table lists compatible LiFePO4 cells, but any LiFePO4 chemistry cell of 18650 size should work. It is not recommended to mix cells of different capacities, as the lowest capacity cell will dictate the lowest safe point of discharge.

Brand	Model	Capacity
Eremit	18650 LiFePO4	2000mAh
JGNE	MH48108	1800mAh
IFR	18650 LiFePO4	1400mAh
LithiumWerks	APR18650M1-B	1100mAh
Sony Konion	US18650FTC1	1100mAh

7.11 Compatible Displays

MNT Reform was designed to be compatible with a number of 13.3 inch (diagonal) 1920×1080 pixel eDP displays. We tested the following display models successfully:

Brand	Model
Innolux	N125HCE-GN1 (Center Connector)
Innolux	N125HCE-GN1 (Side Connector)
Innolux	N125HCE-GPA (glossy or matte)
BOE	NV125FH1-N82
AU Optronics	B125HAN02.2

Chapter 8

Advanced Topics

A computer is a complex system where hardware and software interact, and sometimes, unpredicted problems may appear. Most issues can be fixed, and in this chapter we will show you how.

This is for advanced users only. If you are unsure about what you are doing, we encourage you to get in touch with our MNT Community or our email support (`support@mntre.com`).

8.1 Troubleshooting

There are some steps you can try if MNT Reform should stop booting. As always, before working with MNT Reform internals, first disconnect the internal battery and external power and peripherals.

8.1.1 Boot Issues

What can you do if your MNT Reform doesn't boot?

There are several steps you can take to determine the cause.

First of all, check if it has power. If you are in luck, a cable or a connector is just loose and you can plug it back in.

If this doesn't work, take a look at the OLED screen. Does it show anything when you press the *Circle* key for at least 2 seconds? If not, this could have several reasons: the OLED module or the two cables of the keyboard may not be fully connected. It is also possible that the keyboard or the mainboard are defective. You can check the functionality of your keyboard by taking it out of the laptop, turning the *STANDALONE* switch on and connecting it to another computer. If it doesn't work on another computer, then the keyboard is most likely the reason why your Reform doesn't boot.

If the keyboard is working, but your MNT Reform still doesn't boot, the next step would be to make sure the SD card is functional and inserted correctly. If that doesn't fix your boot issue and you have another computer at hand, install the latest System Image on your SD card. Refer to the chapter "Software" and the section "Flashing the System Image" in this handbook.

Insert the freshly flashed SD card and try to boot MNT Reform. If this isn't successful, the motherboard or the Processor Module could be defective. If you have another Processor Module and knowledge of how to swap it, you could try this. We recommend getting in touch with our customer support. You have a 2-year warranty on your device. Warranty repairs are free within this period. Please refer to our FAQ (`https://mntre.com/faq.html`) for more details.

8.1.2 Serial Console

If you have good Linux knowledge and surmise the boot issue is not hardware related, you can try fixing it using the serial console.

The motherboard connectors labeled *S1* and *S2* are serial ports (UART) to which U-Boot and the Linux kernel output diagnostic information on startup. The correct serial port depends on your Processor Module:

Module	Port	Baud
i.MX8MQ	S1	115200
i.MX8MPlus	S1	115200
LS1028A	S1	115200
RCM4-BPi/A311D	S2	115200
RCM4-RPi	S1	115200
RK3588	S1	1500000

Wire up a 3.3V USB-to-UART adapter to the following pins of connector J18 *(S1)* or J20 *(S2)*:

Pin	Function
1	UART1_TXD, connect to RX of your adapter
2	UART1_RXD, connect to TX of your adapter
3	GND, connect to GND of your adapter

Then, use a terminal program such as `tio` on your host computer:

```
tio /dev/ttyUSB0 -b 115200 # Check Module manual
                           # for baud rate
```

If you then switch on Reform (powered by the wall adapter) with the provided SD card inserted, you should see the U-Boot console in `tio`.

8.1.3 Electronics Repair

Before attempting an electronics fix, please contact our customer support at `support@mntre.com`. Additionally, please consult the MNT Community forum (`https://community.mnt.re`) for similar issues. Check our repair guides if you are knowledgeable with electronics. Open the respective KiCad file, for example the motherboard file, and take a look at the schematics and PCB layout. You can trace the power rails and measure them at different points on the board. You need a digital multimeter for this.

The Reform will accept DC power between 9 and 32 volts into its barrel jack that is marked J1 on the motherboard. The barrel plug that the Reform accepts has an outer diameter of 5.5 mm and an inner diameter of 2.1 mm with a positive inner contact (IEC 60130-10:1971 Type A). The nominal input voltage is 24V. If you can't measure the input voltage on R49, check if fuse F1 is blown.

Either wall or battery power will be regulated to ~29V by the buck-boost regulator/charger LTC4020 and output to the main system regulators. U14 is the always-on 3.3V regulator that powers critical chips like the System Controller (LPC11U24, U18). You can confirm *LPC_VCC* power with 3.3V on J22 pin 15.

Two white indicator LEDs on the motherboard, D11 and D12, signal that 3.3V and 5V rails are turned on, respectively. Because of the level shifters U28 and U8, booting from SD card requires both 3.3V and 1.8V rails to work. You can measure 1.8V on C130, for example.

The USB hub U9 and the MIPI to eDP converter U10 also need 1.2V power to work (measure on C37). The display itself requires the *3V3_PWR_AUX* (3.3V) and *USB_PWR* (5V) rails to be switched on by the System Controller.

8.1.4 System Controller

The System Controller has to have working firmware to turn on the main power rails. If it is not responding to commands from the OLED menu, the first thing you can do is pressing the *LPC_RST* button on the motherboard to reset the System Controller.

For debugging, you can use a UART adapter on *SYSCTL* header J23 to talk to the System Controller directly (57600 baud 8N1). To do this, you'll need to solder/crimp an adapter cable with a JST-PH plug.

8.1.5 Software Issues

If you suspect software issues, run the `reform-check` command (see “Software” chapter, “Reform Tools” section in this handbook).

8.2 System Boot

Unlike a PC that uses BIOS, Reform utilizes U-Boot, a bootloader commonly used on ARM processors. At the time of writing, Reform only supports ARM based modules.

The Processor Module will usually try to load boot code from the SD card, possibly depending on the setting of a DIP switch on the your specific module. MNT Reform comes with U-Boot on the SD Card. Some MNT Reform Processor Modules can boot directly from other media such as eMMC flash. Refer to the module documentation for further information.

U-Boot is like a mini operating system and shell that allows you to inspect parts of the system (like PCIe, USB devices or Ethernet) and set up parameters to be passed to the real operating system kernel such as Linux, and start it. Every module has its own U-Boot version, specifically adapted for Reform. The sources and build instructions for all versions can be found at: `https://source.mnt.re/reform`

U-Boot needs 3 files to boot Linux:

- The Linux kernel itself, named `vmlinuz-...-reform2-arm64`.
- The device tree blob (DTB). The file has a Processor Module specific file name ending with `.dtb`. The device tree is a data structure that lists the addresses of and parameters for all the devices in the system that Linux needs to initialize drivers for.

- U-Boot looks for a file called `boot.scr` on the SD card, which is a script of commands that performs the actual loading of the OS. This script is normally managed by Debian and has a binary header. Usually, you never need to edit it yourself. If you really need to and know what you're doing, a tool called `mkimage` is required to update it.

Theoretically, you can boot other operating systems and Linux distributions besides Debian, such as FreeBSD, NetBSD, OpenBSD—if they include all necessary drivers for your Processor Module and provide an `extlinux.conf` file for U-Boot. Refer to `https://docs.u-boot.org` for details. Booting another Linux distribution can be achieved by combining the MNT Reform Linux kernel and DTB on the boot partition with the distribution's root file system extracted to the second partition.

Chapter 9

Schematics

All of our Reform-related schematics, design files and documentation are publicly available on our GitLab instance:

`https://source.mnt.re/reform/reform`

All folders that have “pcb” in their name contain KiCad projects that you can explore interactively.

9.1 Motherboard Schematics

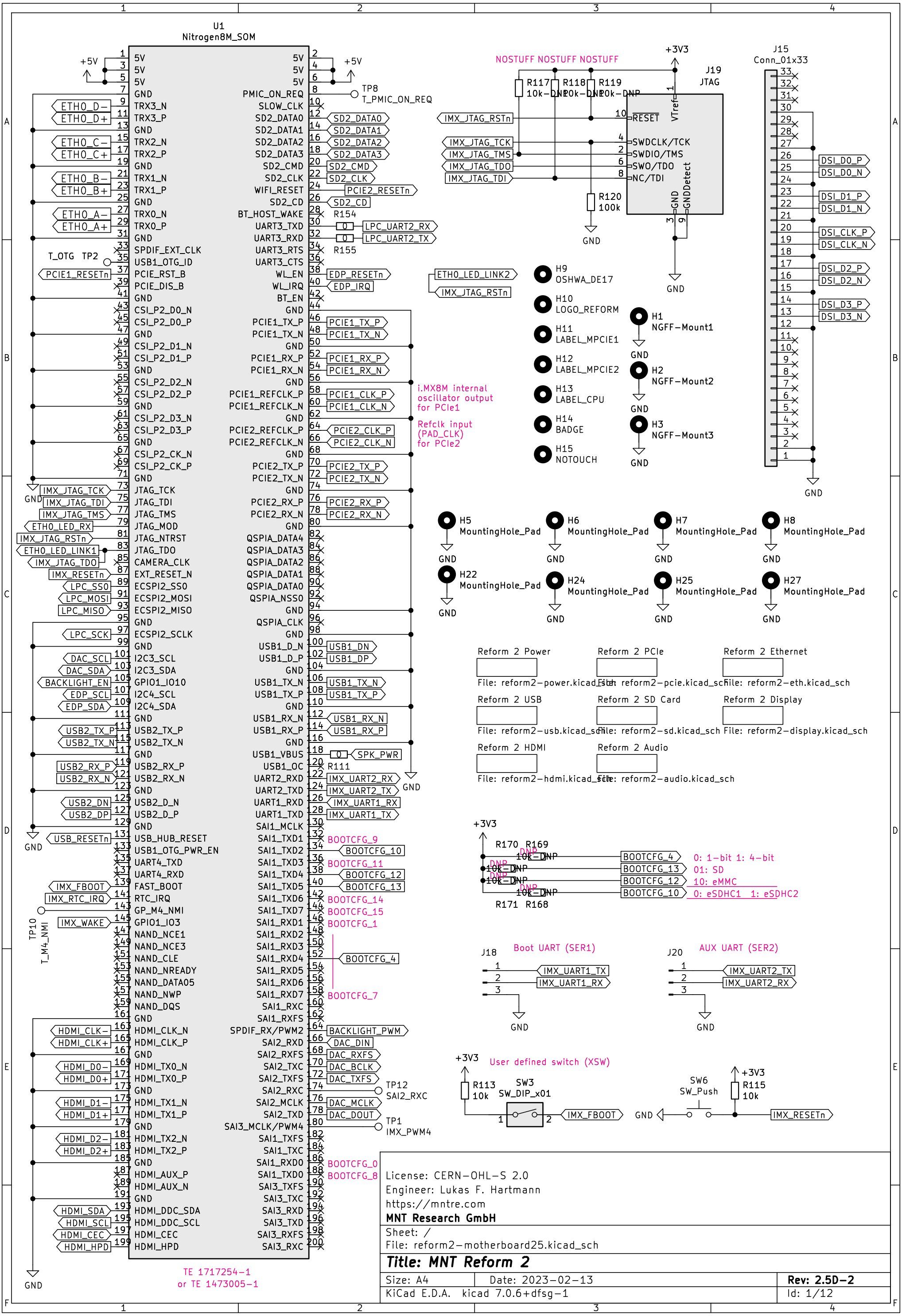
U1
Nitrogen8M_SOM
1 5V
3 5V
5 5V
7 GND
9 TRX3_N
11 TRX3_P
13 GND
15 TRX2_N
17 TRX2_P
19 GND
21 TRX1_N
23 TRX1_P
25 GND
27 TRX0_N
29 TRX0_P
31 GND
33 SPDIF_EXT_CLK
35 USB1_OTG_ID
37 PCIE_RST_B
39 PCIE_DIS_B
41 GND
43 CSI_P2_D0_N
45 CSI_P2_D0_P
47 GND
49 CSI_P2_D1_N
51 CSI_P2_D1_P
53 GND
55 CSI_P2_D2_N
57 CSI_P2_D2_P
59 GND
61 CSI_P2_D3_N
63 CSI_P2_D3_P
65 GND
67 CSI_P2_CK_N
69 CSI_P2_CK_P
71 GND
73 JTAG_TCK
75 JTAG_TDI
77 JTAG_TMS
79 JTAG_MOD
81 JTAG_NTRST
83 JTAG_TDO
85 CAMERA_CLK
87 EXT_RESET_N
89 ECSPI2_SS0
91 ECSPI2_MOSI
93 ECSPI2_MISO
95 GND
97 ECSPI2_SCLK
99 GND
101 I2C3_SCL
103 I2C3_SDA
105 GPIO1_IO10
107 I2C4_SCL
109 I2C4_SDA
111 GND
113 USB2_TX_P
115 USB2_TX_N
117 GND
119 USB2_RX_P
121 USB2_RX_N
123 GND
125 USB2_D_N
127 USB2_D_P
129 GND
131 USB_HUB_RESET
133 USB1_OTG_PWR_EN
135 UART4_TXD
137 UART4_RXD
139 FAST_BOOT
141 RTC_IRQ
143 GP_M4_NMI
145 GPIO1_IO3
147 NAND_NCE1
149 NAND_NCE3
151 NAND_CLE
153 NAND_NREADY
155 NAND_DATA05
157 NAND_NWP
159 NAND_DQS
161 GND
163 HDMI_CLK_N
165 HDMI_CLK_P
167 GND
169 HDMI_TX0_N
171 HDMI_TX0_P
173 GND
175 HDMI_TX1_N
177 HDMI_TX1_P
179 GND
181 HDMI_TX2_N
183 HDMI_TX2_P
185 GND
187 HDMI_AUX_P
189 HDMI_AUX_N
191 GND
193 HDMI_DDC_SDA
195 HDMI_DDC_SCL
197 HDMI_CEC
199 HDMI_HPD
2 5V
4 5V
6 5V
8 PMIC_ON_REQ
10 SLOW_CLK
12 SD2_DATA0
14 SD2_DATA1
16 SD2_DATA2
18 SD2_DATA3
20 SD2_CMD
22 SD2_CLK
24 WIFI_RESET
26 SD2_CD
28 BT_HOST_WAKE
30 UART3_TXD
32 UART3_RXD
34 UART3_RTS
36 UART3_CTS
38 WL_EN
40 WL_IRQ
42 BT_EN
44 GND
46 PCIE1_TX_P
48 PCIE1_TX_N
50 GND
52 PCIE1_RX_P
54 PCIE1_RX_N
56 GND
58 PCIE1_REFCLK_P
60 PCIE1_REFCLK_N
62 GND
64 PCIE2_REFCLK_P
66 PCIE2_REFCLK_N
68 GND
70 PCIE2_TX_P
72 PCIE2_TX_N
74 GND
76 PCIE2_RX_P
78 PCIE2_RX_N
80 GND
82 QSPIA_DATA4
84 QSPIA_DATA3
86 QSPIA_DATA2
88 QSPIA_DATA1
90 QSPIA_DATA0
92 QSPIA_NSS0
94 GND
96 QSPIA_CLK
98 GND
100 USB1_D_N
102 USB1_D_P
104 GND
106 USB1_TX_N
108 USB1_TX_P
110 GND
112 USB1_RX_N
114 USB1_RX_P
116 GND
118 USB1_VBUS
120 USB1_OC
122 UART2_RXD
124 UART2_TXD
126 UART1_RXD
128 UART1_TXD
130 SAI1_MCLK
132 SAI1_TXD1
134 SAI1_TXD2
136 SAI1_TXD3
138 SAI1_TXD4
140 SAI1_TXD5
142 SAI1_TXD6
144 SAI1_TXD7
146 SAI1_RXD1
148 SAI1_RXD2
150 SAI1_RXD3
152 SAI1_RXD4
154 SAI1_RXD5
156 SAI1_RXD6
158 SAI1_RXD7
160 SAI1_RXC
162 SAI1_RXFS
164 SPDIF_RX/PWM2
166 SAI2_RXD
168 SAI2_RXFS
170 SAI2_TXC
172 SAI2_TXFS
174 SAI2_RXC
176 SAI2_MCLK
178 SAI2_TXD
180 SAI3_MCLK/PWM4
182 SAI1_TXFS
184 SAI1_TXC
186 SAI1_RXD0
188 SAI1_TXD0
190 SAI3_TXFS
192 SAI3_TXC
194 SAI3_RXD
196 SAI3_TXD
198 SAI3_RXFS
200 SAI3_RXC
+5V
+5V
GND
ETH0_D−
ETH0_D+
ETH0_C−
ETH0_C+
ETH0_B−
ETH0_B+
ETH0_A−
ETH0_A+
T_OTG TP2
PCIE1_RESETn
IMX_JTAG_TCK
IMX_JTAG_TDI
IMX_JTAG_TMS
ETH0_LED_RX
IMX_JTAG_RSTn
ETH0_LED_LINK1
IMX_JTAG_TDO
IMX_RESETn
LPC_SS0
LPC_MOSI
LPC_MISO
LPC_SCK
DAC_SCL
DAC_SDA
BACKLIGHT_EN
EDP_SCL
EDP_SDA
USB2_TX_P
USB2_TX_N
USB2_RX_P
USB2_RX_N
USB2_DN
USB2_DP
USB_RESETn
IMX_FBOOT
IMX_RTC_IRQ
TP10
T_M4_NMI
IMX_WAKE
HDMI_CLK−
HDMI_CLK+
HDMI_D0−
HDMI_D0+
HDMI_D1−
HDMI_D1+
HDMI_D2−
HDMI_D2+
HDMI_SDA
HDMI_SCL
HDMI_CEC
HDMI_HPD
TP8
T_PMIC_ON_REQ
SD2_DATA0
SD2_DATA1
SD2_DATA2
SD2_DATA3
SD2_CMD
SD2_CLK
PCIE2_RESETn
SD2_CD
R154
0
LPC_UART2_RX
0
LPC_UART2_TX
R155
EDP_RESETn
EDP_IRQ
PCIE1_TX_P
PCIE1_TX_N
PCIE1_RX_P
PCIE1_RX_N
PCIE1_CLK_P
PCIE1_CLK_N
PCIE2_CLK_P
PCIE2_CLK_N
PCIE2_TX_P
PCIE2_TX_N
PCIE2_RX_P
PCIE2_RX_N
i.MX8M internal oscillator output for PCIe1
Refclk input (PAD_CLK) for PCIe2
USB1_DN
USB1_DP
USB1_TX_N
USB1_TX_P
USB1_RX_N
USB1_RX_P
0
SPK_PWR
R111
IMX_UART2_RX
IMX_UART2_TX
IMX_UART1_RX
IMX_UART1_TX
GND
BOOTCFG_9
BOOTCFG_10
BOOTCFG_11
BOOTCFG_12
BOOTCFG_13
BOOTCFG_14
BOOTCFG_15
BOOTCFG_1
BOOTCFG_4
BOOTCFG_7
BACKLIGHT_PWM
DAC_DIN
DAC_RXFS
DAC_BCLK
DAC_TXFS
TP12
SAI2_RXC
DAC_MCLK
DAC_DOUT
TP1
IMX_PWM4
BOOTCFG_0
BOOTCFG_8
GND
TE 1717254−1
or TE 1473005−1
NOSTUFF NOSTUFF NOSTUFF
+3V3
R117 10k−DNP
R118 10k−DNP
R119 10k−DNP
J19
JTAG
IMX_JTAG_RSTn
IMX_JTAG_TCK
IMX_JTAG_TMS
IMX_JTAG_TDO
IMX_JTAG_TDI
10 RESET
4 SWDCLK/TCK
2 SWDIO/TMS
6 SWO/TDO
8 NC/TDI
1 VTref
3 GND
9 GNDDetect
R120
100k
GND
GND
ETH0_LED_LINK2
IMX_JTAG_RSTn
H9 OSHWA_DE17
H10 LOGO_REFORM
H11 LABEL_MPCIE1
H12 LABEL_MPCIE2
H13 LABEL_CPU
H14 BADGE
H15 NOTOUCH
H1 NGFF−Mount1
H2 NGFF−Mount2
H3 NGFF−Mount3
GND
J15
Conn_01x33
DSI_D0_P
DSI_D0_N
DSI_D1_P
DSI_D1_N
DSI_CLK_P
DSI_CLK_N
DSI_D2_P
DSI_D2_N
DSI_D3_P
DSI_D3_N
GND
H5 MountingHole_Pad
H6 MountingHole_Pad
H7 MountingHole_Pad
H8 MountingHole_Pad
H22 MountingHole_Pad
H24 MountingHole_Pad
H25 MountingHole_Pad
H27 MountingHole_Pad
Reform 2 Power
File: reform2−power.kicad_sch
Reform 2 PCIe
File: reform2−pcie.kicad_sch
Reform 2 Ethernet
File: reform2−eth.kicad_sch
Reform 2 USB
File: reform2−usb.kicad_sch
Reform 2 SD Card
File: reform2−sd.kicad_sch
Reform 2 Display
File: reform2−display.kicad_sch
Reform 2 HDMI
File: reform2−hdmi.kicad_sch
Reform 2 Audio
File: reform2−audio.kicad_sch
+3V3
R170 R169
DNP 10k−DNP
DNP 10k−DNP
DNP 10k−DNP
DNP 10k−DNP
R171 R168
BOOTCFG_4
BOOTCFG_13
BOOTCFG_12
BOOTCFG_10
0: 1−bit 1: 4−bit
01: SD
10: eMMC
0: eSDHC1 1: eSDHC2
J18 Boot UART (SER1)
1 2 3
IMX_UART1_TX
IMX_UART1_RX
GND
J20 AUX UART (SER2)
IMX_UART2_TX
IMX_UART2_RX
GND
+3V3 User defined switch (XSW)
R113 10k
SW3 SW_DIP_x01
IMX_FBOOT
SW6 SW_Push
GND
+3V3
R115 10k
IMX_RESETn

License: CERN−OHL−S 2.0
Engineer: Lukas F. Hartmann
https://mntre.com
MNT Research GmbH
Sheet: /
File: reform2−motherboard25.kicad_sch
Title: MNT Reform 2
Size: A4 Date: 2023−02−13 **Rev: 2.5D−2**
KiCad E.D.A. kicad 7.0.6+dfsg−1 Id: 1/12

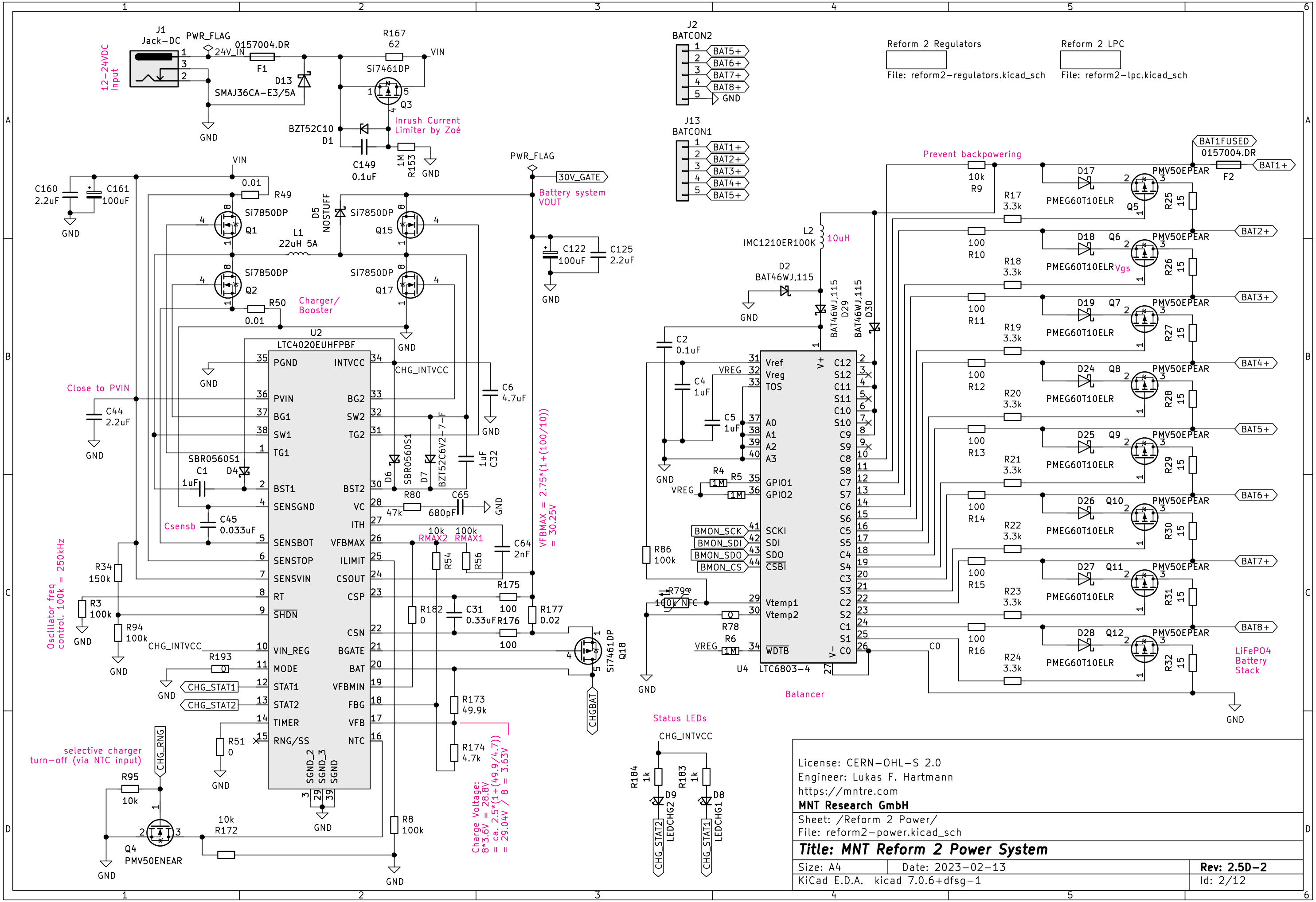
12-24VDC Input
J1 Jack-DC
PWR_FLAG
24V_IN
0157004.DR F1
D13 SMAJ36CA-E3/5A
R167 62
VIN
Si7461DP Q3
Inrush Current Limiter by Zoé
BZT52C10 D1
C149 0.1uF
R153 1M
GND
C160 2.2uF
C161 100uF
0.01 R49
Si7850DP Q1
Si7850DP Q2
L1 22uH 5A
D5 NOSTUFF
Si7850DP Q15
Si7850DP Q17
R50 0.01
Charger/ Booster
U2 LTC4020EUHFPBF
PGND
INTVCC
PVIN
BG2
BG1
SW2
SW1
TG2
TG1
BST1
BST2
SENSGND
VC
ITH
SENSBOT
VFBMAX
SENSTOP
ILIMIT
SENSVIN
CSOUT
RT
CSP
SHDN
CSN
VIN_REG
BGATE
MODE
BAT
STAT1
VFBMIN
STAT2
FBG
TIMER
VFB
RNG/SS
NTC
SGND_2
SGND_3
SGND
CHG_INTVCC
C6 4.7uF
Close to PVIN
C44 2.2uF
SBR0560S1 C1 1uF D4
D6 SBR0560S1
D7 BZT52C6V2-7-F
C32 1uF
R80 47k
C65 680pF
Csensb
C45 0.033uF
10k RMAX2 R54
100k RMAX1 R56
C64 2nF
VFBMAX = 2.75*(1+(100/10)) = 30.25V
PWR_FLAG
30V_GATE
Battery system VOUT
C122 100uF
C125 2.2uF
R34 150k
R3 100k
R94 100k
Oscillator freq control. 100k = 250kHz
R193 0
CHG_STAT1
CHG_STAT2
R51 0
R175 100
R176 100
R177 0.02
R182 0
C31 0.33uF
Si7461DP Q18
CHGBAT
R173 49.9k
R174 4.7k
Charge Voltage: 8*3.6V = 28.8V = ca. 2.5*(1+(49.9/4.7)) = 29.04V / 8 = 3.63V
R8 100k
selective charger turn-off (via NTC input)
CHG_RNG
R95 10k
Q4 PMV50ENEAR
10k R172
J2 BATCON2
BAT5+
BAT6+
BAT7+
BAT8+
J13 BATCON1
BAT1+
BAT2+
BAT3+
BAT4+
Reform 2 Regulators
File: reform2-regulators.kicad_sch
Reform 2 LPC
File: reform2-lpc.kicad_sch
L2 IMC1210ER100K 10uH
D2 BAT46WJ,115
D29 BAT46WJ,115
D30 BAT46WJ,115
C2 0.1uF
C4 1uF
C5 1uF
VREG
R4 1M
R5 1M
BMON_SCK
BMON_SDI
BMON_SDO
BMON_CS
R86 100k
R79 100k NTC
R78 0
R6 1M
U4 LTC6803-4
Vref
Vreg
TOS
A0
A1
A2
A3
GPIO1
GPIO2
SCKI
SDI
SDO
CSBI
Vtemp1
Vtemp2
WDTB
V+
V-
C12
S12
C11
S11
C10
S10
C9
S9
C8
S8
C7
S7
C6
S6
C5
S5
C4
S4
C3
S3
C2
S2
C1
S1
C0
Balancer
Prevent backpowering
10k R9
R17 3.3k
R18 3.3k
R19 3.3k
R20 3.3k
R21 3.3k
R22 3.3k
R23 3.3k
R24 3.3k
100 R10
100 R11
100 R12
100 R13
100 R14
100 R15
100 R16
D17
D18
D19
D24
D25
D26
D27
D28
PMEG60T10ELR
Vgs
Q5
Q6
Q7
Q8
Q9
Q10
Q11
Q12
PMV50EPEAR
R25 15
R26 15
R27 15
R28 15
R29 15
R30 15
R31 15
R32 15
BAT1FUSED
0157004.DR F2
LiFePO4 Battery Stack
Status LEDs
CHG_INTVCC
R184 1k
R183 1k
D9 LEDCHG2
D8 LEDCHG1
CHG_STAT2
CHG_STAT1

License: CERN-OHL-S 2.0
Engineer: Lukas F. Hartmann
https://mntre.com
MNT Research GmbH
Sheet: /Reform 2 Power/
File: reform2-power.kicad_sch

Title: MNT Reform 2 Power System

Size: A4 Date: 2023-02-13 **Rev: 2.5D-2**
KiCad E.D.A. kicad 7.0.6+dfsg-1 Id: 2/12

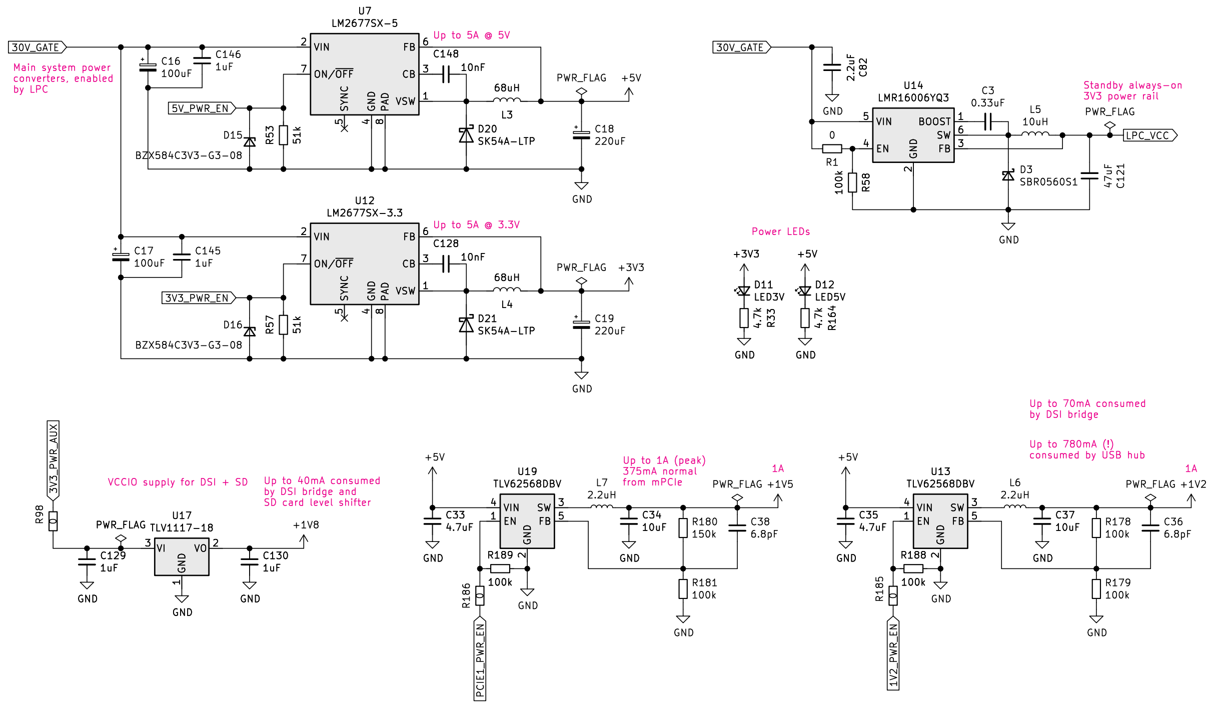
U7
LM2677SX-5
30V_GATE
Main system power converters, enabled by LPC
C16 100uF
C146 1uF
VIN
ON/OFF
SYNC
GND
PAD
FB
CB
VSW
Up to 5A @ 5V
C148 10nF
68uH
L3
PWR_FLAG
+5V
5V_PWR_EN
D15
BZX584C3V3-G3-08
R53 51k
D20 SK54A-LTP
C18 220uF
GND
U12
LM2677SX-3.3
Up to 5A @ 3.3V
C17 100uF
C145 1uF
C128 10nF
68uH
L4
+3V3
3V3_PWR_EN
D16
BZX584C3V3-G3-08
R57 51k
D21 SK54A-LTP
C19 220uF
30V_GATE
2.2uF C82
U14
LMR16006YQ3
BOOST
SW
EN
FB
C3 0.33uF
L5 10uH
Standby always-on 3V3 power rail
LPC_VCC
0 R1
100k R58
D3 SBR0560S1
47uF C121
Power LEDs
+3V3
D11 LED3V
4.7k R33
+5V
D12 LED5V
4.7k R164
Up to 70mA consumed by DSI bridge
Up to 780mA (!) consumed by USB hub
3V3_PWR_AUX
R98
VCCIO supply for DSI + SD
Up to 40mA consumed by DSI bridge and SD card level shifter
U17
TLV1117-18
VI
VO
C129 1uF
C130 1uF
+1V8
U19
TLV62568DBV
C33 4.7uF
R189 100k
R186
PCIE1_PWR_EN
L7 2.2uH
Up to 1A (peak) 375mA normal from mPCIe
1A
PWR_FLAG +1V5
C34 10uF
R180 150k
C38 6.8pF
R181 100k
U13
TLV62568DBV
C35 4.7uF
R188 100k
R185
1V2_PWR_EN
L6 2.2uH
C37 10uF
R178 100k
PWR_FLAG +1V2
C36 6.8pF
R179 100k

License: CERN-OHL-S 2.0
Engineer: Lukas F. Hartmann
https://mntre.com
MNT Research GmbH
Sheet: /Reform 2 Power/Reform 2 Regulators/
File: reform2-regulators.kicad_sch

Title: Reform 2 Regulators

Size: A4 | Date: 2023-02-13 | **Rev: 2.5D-2**
KiCad E.D.A. kicad 7.0.6+dfsg-1 | Id: 3/12

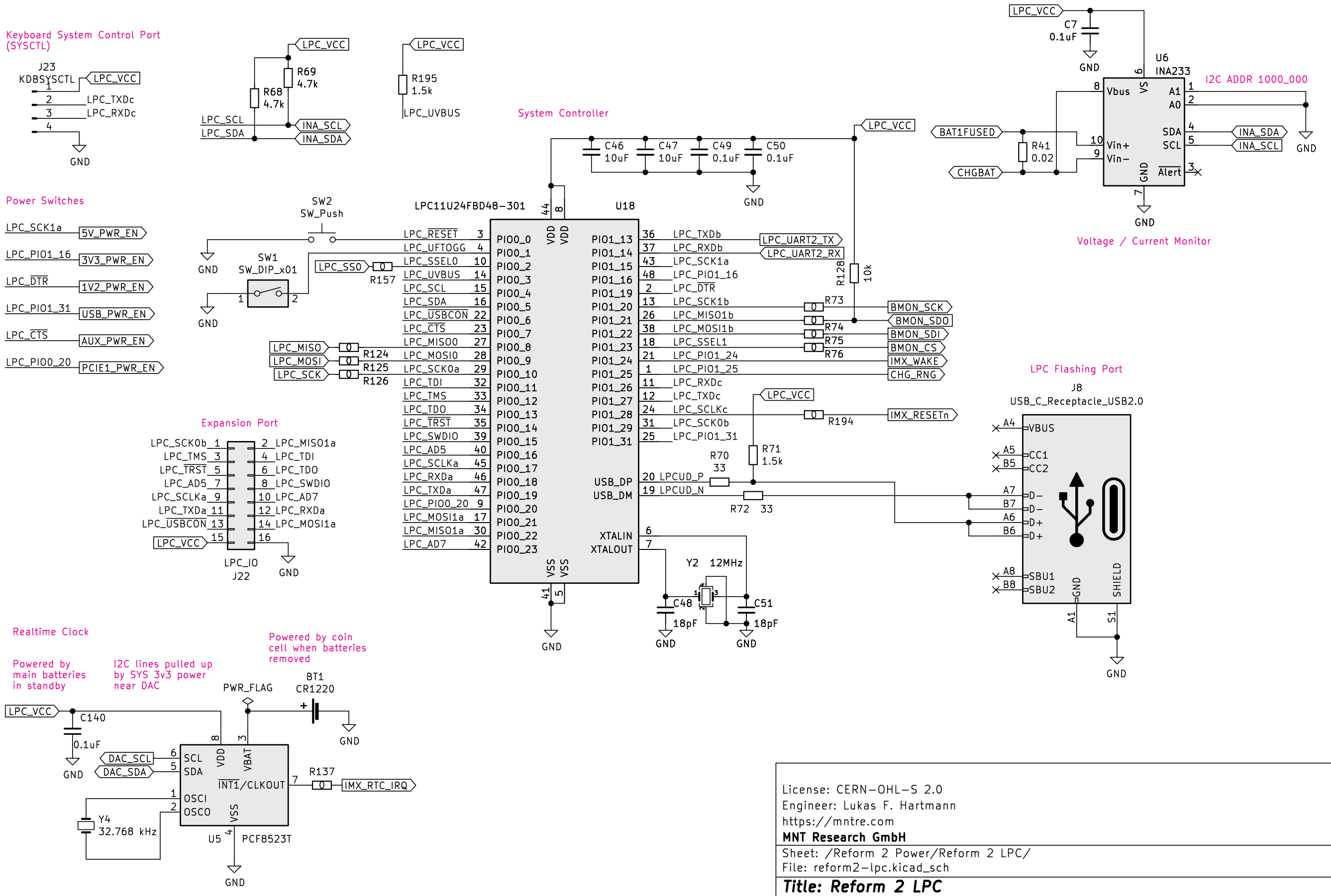
Keyboard System Control Port (SYSCTL)
J23
KDBSYSCTL
LPC_VCC
LPC_TXDc
LPC_RXDc
GND
Power Switches
LPC_SCK1a
5V_PWR_EN
LPC_PIO1_16
3V3_PWR_EN
LPC_DTR
1V2_PWR_EN
LPC_PIO1_31
USB_PWR_EN
LPC_CTS
AUX_PWR_EN
LPC_PIO0_20
PCIE1_PWR_EN
R69 4.7k
R68 4.7k
LPC_SCL
LPC_SDA
INA_SCL
INA_SDA
R195 1.5k
LPC_UVBUS
System Controller
SW2 SW_Push
SW1 SW_DIP_x01
LPC_SSO
R157
LPC_MISO
LPC_MOSI
LPC_SCK
R124
R125
R126
LPC11U24FBD48-301
U18
LPC_RESET
LPC_UFTOGG
LPC_SSEL0
LPC_UVBUS
LPC_USBCON
LPC_CTS
LPC_MISO0
LPC_MOSI0
LPC_SCK0a
LPC_TDI
LPC_TMS
LPC_TDO
LPC_TRST
LPC_SWDIO
LPC_AD5
LPC_SCLKa
LPC_RXDa
LPC_TXDa
LPC_PIO0_20
LPC_MOSI1a
LPC_MISO1a
LPC_AD7
PIO0_0 … PIO0_23
VDD
VSS
PIO1_13 … PIO1_31
USB_DP
USB_DM
XTALIN
XTALOUT
LPC_TXDb
LPC_RXDb
LPC_SCK1a
LPC_PIO1_16
LPC_DTR
LPC_SCK1b
LPC_MISO1b
LPC_MOSI1b
LPC_SSEL1
LPC_PIO1_24
LPC_PIO1_25
LPC_RXDc
LPC_TXDc
LPC_SCLKc
LPC_SCK0b
LPC_PIO1_31
LPC_UART2_TX
LPC_UART2_RX
R128 10k
R73
R74
R75
R76
BMON_SCK
BMON_SDO
BMON_SDI
BMON_CS
IMX_WAKE
CHG_RNG
R194
IMX_RESETn
R70 33
R71 1.5k
R72 33
20 LPCUD_P
19 LPCUD_N
C46 10uF
C47 10uF
C49 0.1uF
C50 0.1uF
Y2 12MHz
C48 18pF
C51 18pF
Expansion Port
LPC_IO
J22
LPC_SCK0b
LPC_TMS
LPC_TRST
LPC_AD5
LPC_SCLKa
LPC_TXDa
LPC_USBCON
LPC_VCC
LPC_MISO1a
LPC_TDI
LPC_TDO
LPC_SWDIO
LPC_AD7
LPC_RXDa
LPC_MOSI1a
C7 0.1uF
U6
INA233
I2C ADDR 1000_000
Vbus
VS
A1
A0
Vin+
Vin-
SDA
SCL
Alert
BAT1FUSED
CHGBAT
R41 0.02
Voltage / Current Monitor
LPC Flashing Port
J8
USB_C_Receptacle_USB2.0
VBUS
CC1
CC2
D-
D+
SBU1
SBU2
SHIELD
Realtime Clock
Powered by main batteries in standby
I2C lines pulled up by SYS 3v3 power near DAC
Powered by coin cell when batteries removed
PWR_FLAG
BT1
CR1220
C140
0.1uF
DAC_SCL
DAC_SDA
SCL
SDA
VDD
VBAT
INT1/CLKOUT
OSCI
OSCO
VSS
R137
IMX_RTC_IRQ
Y4
32.768 kHz
U5
PCF8523T
GND

License: CERN-OHL-S 2.0
Engineer: Lukas F. Hartmann
https://mntre.com
MNT Research GmbH

Sheet: /Reform 2 Power/Reform 2 LPC/
File: reform2-lpc.kicad_sch

Title: Reform 2 LPC

Size: A4 Date: 2023-02-13 **Rev: 2.5D-2**
KiCad E.D.A. kicad 7.0.6+dfsg-1 Id: 4/12

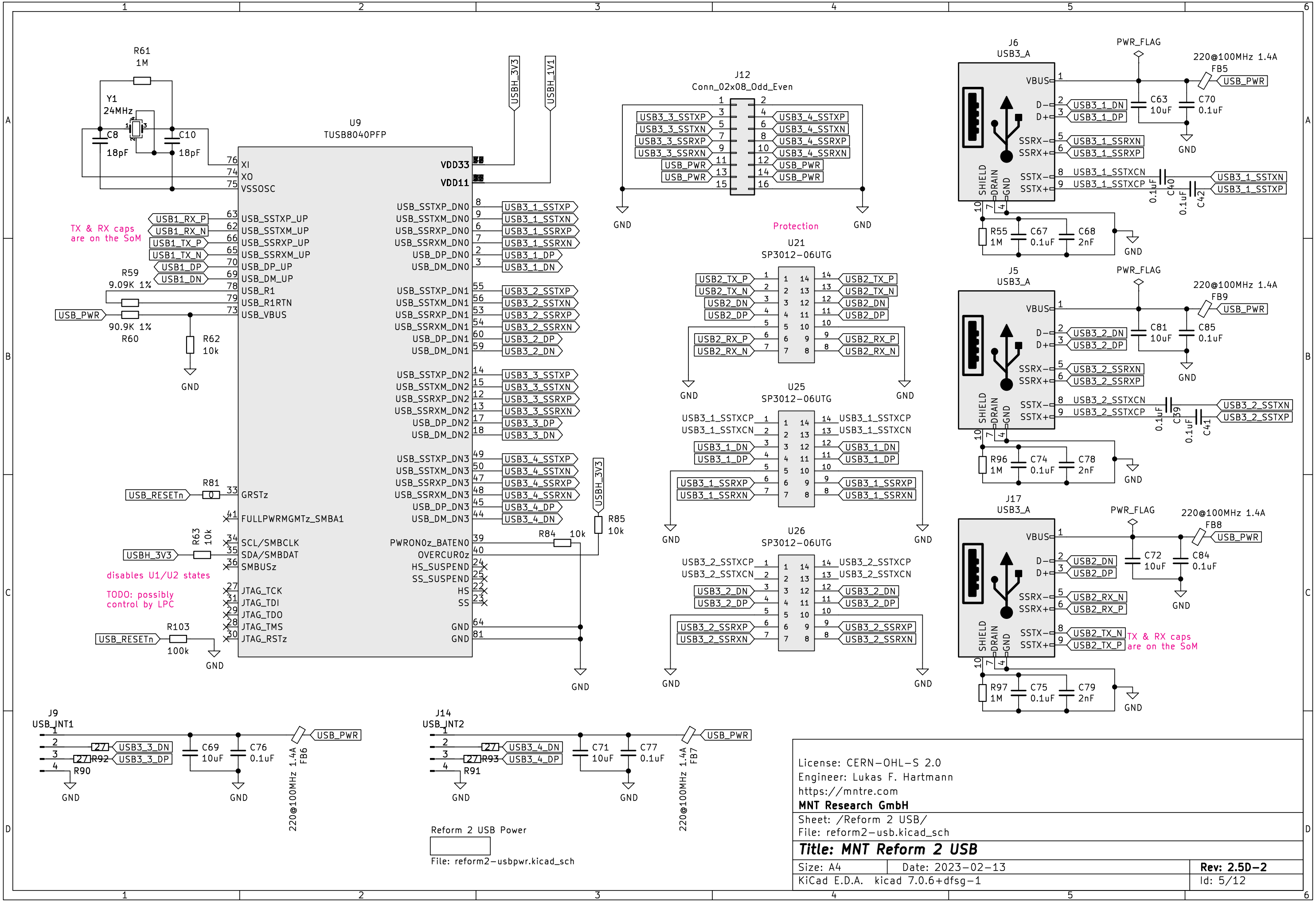
R61
1M
Y1
24MHz
C8
18pF
C10
18pF
U9
TUSB8040PFP
XI
XO
VSSOSC
VDD33
VDD11
USBH_3V3
USBH_1V1
USB_SSTXP_UP
USB_SSTXM_UP
USB_SSRXP_UP
USB_SSRXM_UP
USB_DP_UP
USB_DM_UP
USB_R1
USB_R1RTN
USB_VBUS
USB1_RX_P
USB1_RX_N
USB1_TX_P
USB1_TX_N
USB1_DP
USB1_DN
R59
9.09K 1%
R60
90.9K 1%
USB_PWR
R62
10k
GND
USB_SSTXP_DN0
USB_SSTXM_DN0
USB_SSRXP_DN0
USB_SSRXM_DN0
USB_DP_DN0
USB_DM_DN0
USB_SSTXP_DN1
USB_SSTXM_DN1
USB_SSRXP_DN1
USB_SSRXM_DN1
USB_DP_DN1
USB_DM_DN1
USB_SSTXP_DN2
USB_SSTXM_DN2
USB_SSRXP_DN2
USB_SSRXM_DN2
USB_DP_DN2
USB_DM_DN2
USB_SSTXP_DN3
USB_SSTXM_DN3
USB_SSRXP_DN3
USB_SSRXM_DN3
USB_DP_DN3
USB_DM_DN3
USB3_1_SSTXP
USB3_1_SSTXN
USB3_1_SSRXP
USB3_1_SSRXN
USB3_1_DP
USB3_1_DN
USB3_2_SSTXP
USB3_2_SSTXN
USB3_2_SSRXP
USB3_2_SSRXN
USB3_2_DP
USB3_2_DN
USB3_3_SSTXP
USB3_3_SSTXN
USB3_3_SSRXP
USB3_3_SSRXN
USB3_3_DP
USB3_3_DN
USB3_4_SSTXP
USB3_4_SSTXN
USB3_4_SSRXP
USB3_4_SSRXN
USB3_4_DP
USB3_4_DN
R81
0
USB_RESETn
GRSTz
FULLPWRMGMTz_SMBA1
R63
10k
USBH_3V3
SCL/SMBCLK
SDA/SMBDAT
SMBUSz
JTAG_TCK
JTAG_TDI
JTAG_TDO
JTAG_TMS
JTAG_RSTz
R103
100k
PWRON0z_BATEN0
OVERCUR0z
HS_SUSPEND
SS_SUSPEND
HS
SS
GND
R84
10k
R85
10k
J12
Conn_02x08_Odd_Even
USB3_3_SSTXP
USB3_3_SSTXN
USB3_3_SSRXP
USB3_3_SSRXN
USB3_4_SSTXP
USB3_4_SSTXN
USB3_4_SSRXP
USB3_4_SSRXN
U21
SP3012-06UTG
USB2_TX_P
USB2_TX_N
USB2_DN
USB2_DP
USB2_RX_P
USB2_RX_N
U25
SP3012-06UTG
USB3_1_SSTXCP
USB3_1_SSTXCN
U26
SP3012-06UTG
USB3_2_SSTXCP
USB3_2_SSTXCN
J6
USB3_A
J5
USB3_A
J17
USB3_A
VBUS
D-
D+
SSRX-
SSRX+
SSTX-
SSTX+
SHIELD
DRAIN
GND
PWR_FLAG
220@100MHz 1.4A
FB5
FB9
FB8
FB6
FB7
C63
10uF
C70
0.1uF
C81
10uF
C85
0.1uF
C72
10uF
C84
0.1uF
C40
0.1uF
C42
0.1uF
C39
0.1uF
C41
0.1uF
R55
1M
C67
0.1uF
C68
2nF
R96
1M
C74
0.1uF
C78
2nF
R97
1M
C75
0.1uF
C79
2nF
J9
USB_INT1
J14
USB_INT2
27
R92
R90
R93
R91
C69
10uF
C76
0.1uF
C71
10uF
C77
0.1uF
Reform 2 USB Power
File: reform2-usbpwr.kicad_sch

TX & RX caps are on the SoM

Protection

disables U1/U2 states

TODO: possibly control by LPC

TX & RX caps are on the SoM

License: CERN-OHL-S 2.0
Engineer: Lukas F. Hartmann
https://mntre.com
MNT Research GmbH

Sheet: /Reform 2 USB/
File: reform2-usb.kicad_sch

Title: MNT Reform 2 USB

Size: A4	Date: 2023-02-13	**Rev: 2.5D-2**
KiCad E.D.A.	kicad 7.0.6+dfsg-1	Id: 5/12

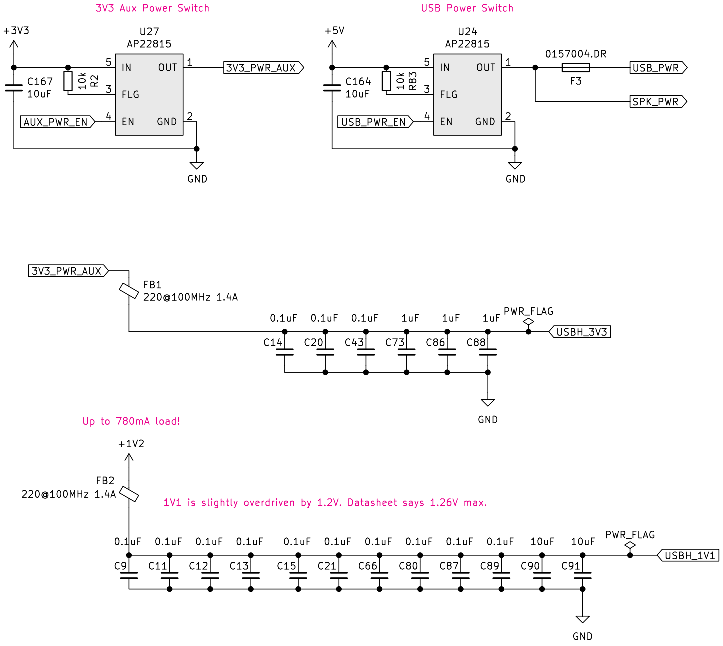
3V3 Aux Power Switch
+3V3
U27
AP22815
5 IN
3 FLG
4 EN
OUT 1
GND 2
3V3_PWR_AUX
C167
10uF
10k
R2
AUX_PWR_EN
GND
USB Power Switch
+5V
U24
AP22815
5 IN
3 FLG
4 EN
OUT 1
GND 2
C164
10uF
10k
R83
USB_PWR_EN
0157004.DR
F3
USB_PWR
SPK_PWR
GND
3V3_PWR_AUX
FB1
220@100MHz 1.4A
0.1uF C14
0.1uF C20
0.1uF C43
1uF C73
1uF C86
1uF C88
PWR_FLAG
USBH_3V3
GND
Up to 780mA load!
+1V2
FB2
220@100MHz 1.4A
1V1 is slightly overdriven by 1.2V. Datasheet says 1.26V max.
0.1uF C9
0.1uF C11
0.1uF C12
0.1uF C13
0.1uF C15
0.1uF C21
0.1uF C66
0.1uF C80
0.1uF C87
0.1uF C89
10uF C90
10uF C91
PWR_FLAG
USBH_1V1
GND

License: CERN-OHL-S 2.0
Engineer: Lukas F. Hartmann
https://mntre.com
MNT Research GmbH
Sheet: /Reform 2 USB/Reform 2 USB Power/
File: reform2-usbpwr.kicad_sch

Title: Reform 2 USB Power

Size: A4 Date: 2023-02-13 **Rev: 2.5D-2**
KiCad E.D.A. kicad 7.0.6+dfsg-1 Id: 6/12

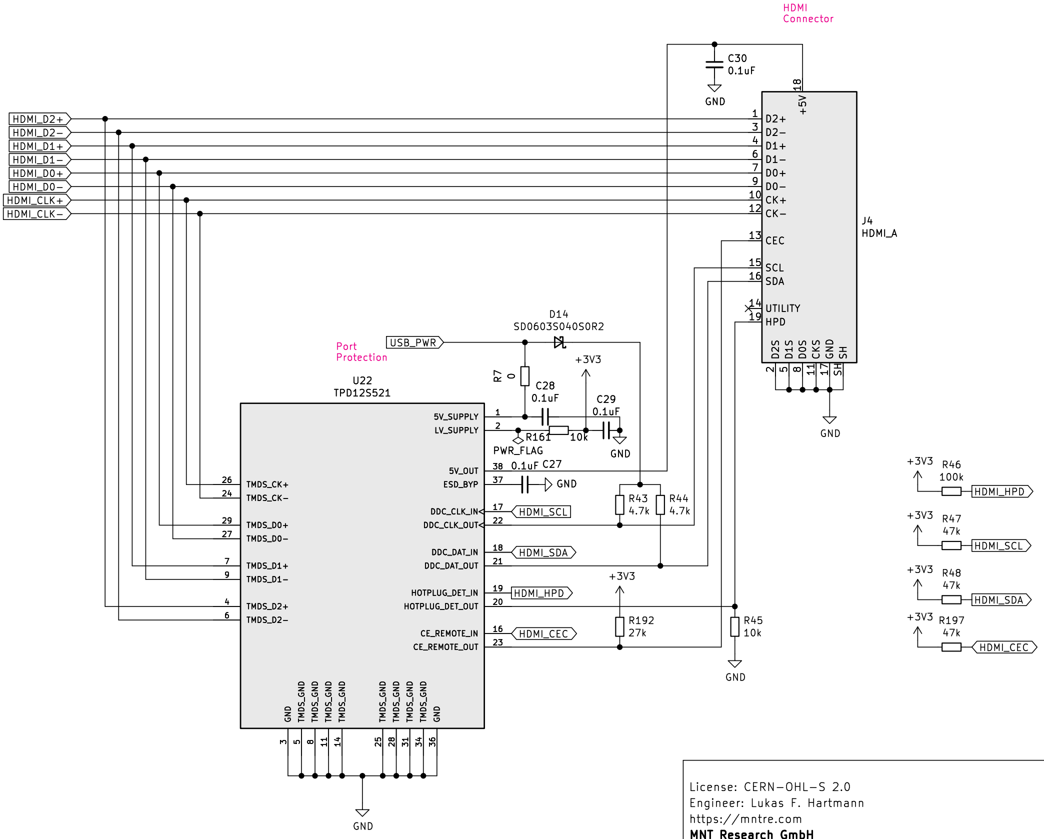
HDMI Connector
J4
HDMI_A
C30
0.1uF
GND
+5V
18
1 D2+
3 D2−
4 D1+
6 D1−
7 D0+
9 D0−
10 CK+
12 CK−
13 CEC
15 SCL
16 SDA
14 UTILITY
19 HPD
D2S 2
D1S 5
D0S 8
CKS 11
GND 17
SH SH
GND
HDMI_D2+
HDMI_D2−
HDMI_D1+
HDMI_D1−
HDMI_D0+
HDMI_D0−
HDMI_CLK+
HDMI_CLK−
Port Protection
USB_PWR
D14
SD0603S040S0R2
R7
0
C28
0.1uF
+3V3
C29
0.1uF
R161
10k
PWR_FLAG
GND
U22
TPD12S521
1 5V_SUPPLY
2 LV_SUPPLY
38 5V_OUT
0.1uF C27
37 ESD_BYP
GND
17 DDC_CLK_IN
22 DDC_CLK_OUT
18 DDC_DAT_IN
21 DDC_DAT_OUT
19 HOTPLUG_DET_IN
20 HOTPLUG_DET_OUT
16 CE_REMOTE_IN
23 CE_REMOTE_OUT
26 TMDS_CK+
24 TMDS_CK−
29 TMDS_D0+
27 TMDS_D0−
7 TMDS_D1+
9 TMDS_D1−
4 TMDS_D2+
6 TMDS_D2−
3 GND
5 TMDS_GND
8 TMDS_GND
11 TMDS_GND
14 TMDS_GND
25 TMDS_GND
28 TMDS_GND
31 TMDS_GND
34 TMDS_GND
36 GND
GND
HDMI_SCL
HDMI_SDA
HDMI_HPD
HDMI_CEC
R43
4.7k
R44
4.7k
+3V3
R192
27k
R45
10k
GND
+3V3
R46
100k
HDMI_HPD
+3V3
R47
47k
HDMI_SCL
+3V3
R48
47k
HDMI_SDA
+3V3
R197
47k
HDMI_CEC

License: CERN−OHL−S 2.0
Engineer: Lukas F. Hartmann
https://mntre.com
MNT Research GmbH

Sheet: /Reform 2 HDMI/
File: reform2−hdmi.kicad_sch

Title: MNT Reform 2 External Display

Size: A4 Date: 2023−02−13 **Rev: 2.5D−2**
KiCad E.D.A. kicad 7.0.6+dfsg−1 Id: 7/12

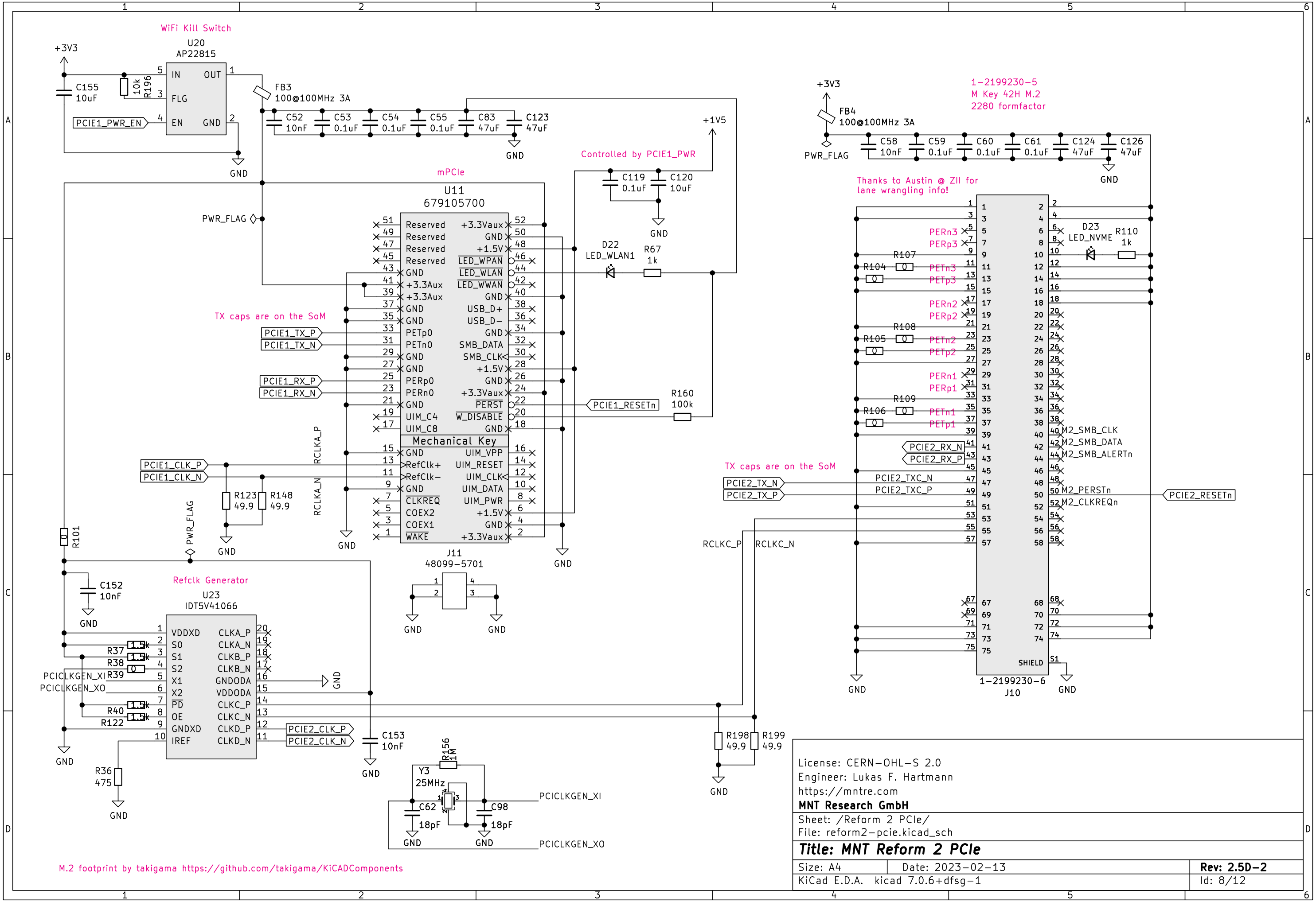
WiFi Kill Switch

Controlled by PCIE1_PWR

mPCIe

TX caps are on the SoM

Refclk Generator

1-2199230-5
M Key 42H M.2
2280 formfactor

Thanks to Austin @ ZII for
lane wrangling info!

TX caps are on the SoM

M.2 footprint by takigama https://github.com/takigama/KiCADComponents

+3V3
U20
AP22815
IN
OUT
FLG
EN
GND
C155
10uF
R196
10k
PCIE1_PWR_EN
FB3
100@100MHz 3A
C52
10nF
C53
0.1uF
C54
0.1uF
C55
0.1uF
C83
47uF
C123
47uF
GND
+1V5
C119
0.1uF
C120
10uF
PWR_FLAG
U11
679105700
Reserved
+3.3Vaux
GND
+1.5V
LED_WPAN
LED_WLAN
LED_WWAN
+3.3Aux
USB_D+
USB_D-
PETp0
PETn0
SMB_DATA
SMB_CLK
PERp0
PERn0
PERST
UIM_C4
UIM_C8
W_DISABLE
Mechanical Key
UIM_VPP
RefClk+
RefClk-
UIM_RESET
UIM_CLK
UIM_DATA
CLKREQ
UIM_PWR
COEX2
COEX1
WAKE
D22
LED_WLAN1
R67
1k
R160
100k
PCIE1_RESETn
PCIE1_TX_P
PCIE1_TX_N
PCIE1_RX_P
PCIE1_RX_N
PCIE1_CLK_P
PCIE1_CLK_N
RCLKA_P
RCLKA_N
R123
49.9
R148
49.9
R101
0
J11
48099-5701
C152
10nF
U23
IDT5V41066
VDDXD
S0
S1
S2
X1
X2
PD
OE
GNDXD
IREF
CLKA_P
CLKA_N
CLKB_P
CLKB_N
GNDODA
VDDODA
CLKC_P
CLKC_N
CLKD_P
CLKD_N
R37
R38
R39
R40
R122
1.5k
PCICLKGEN_XI
PCICLKGEN_XO
R36
475
PCIE2_CLK_P
PCIE2_CLK_N
C153
10nF
Y3
25MHz
R156
1M
C62
18pF
C98
18pF
FB4
100@100MHz 3A
C58
10nF
C59
0.1uF
C60
0.1uF
C61
0.1uF
C124
47uF
C126
47uF
PERn3
PERp3
PETn3
PETp3
PERn2
PERp2
PETn2
PETp2
PERn1
PERp1
PETn1
PETp1
R104
R105
R106
R107
R108
R109
D23
LED_NVME
R110
1k
PCIE2_RX_N
PCIE2_RX_P
PCIE2_TX_N
PCIE2_TX_P
PCIE2_TXC_N
PCIE2_TXC_P
M2_SMB_CLK
M2_SMB_DATA
M2_SMB_ALERTn
M2_PERSTn
M2_CLKREQn
PCIE2_RESETn
RCLKC_P
RCLKC_N
R198
49.9
R199
49.9
SHIELD
1-2199230-6
J10

License: CERN-OHL-S 2.0
Engineer: Lukas F. Hartmann
https://mntre.com
MNT Research GmbH

Sheet: /Reform 2 PCIe/
File: reform2-pcie.kicad_sch

Title: MNT Reform 2 PCIe

Size: A4
Date: 2023-02-13
Rev: 2.5D-2
KiCad E.D.A. kicad 7.0.6+dfsg-1
Id: 8/12

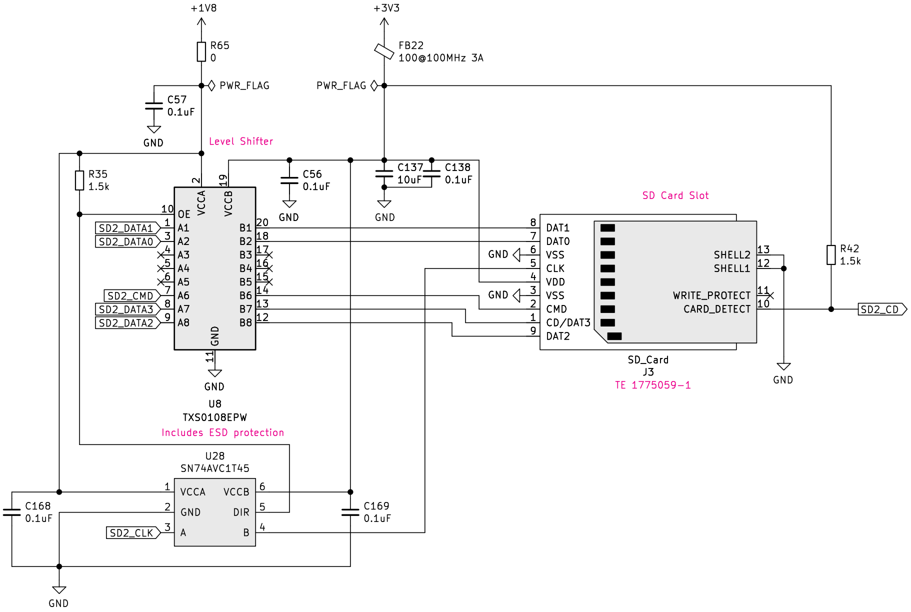
+1V8
R65
0
PWR_FLAG
C57
0.1uF
GND
Level Shifter
+3V3
FB22
100@100MHz 3A
PWR_FLAG
R35
1.5k
C56
0.1uF
GND
C137
10uF
C138
0.1uF
GND
SD Card Slot
R42
1.5k
SD2_CD
OE
VCCA
VCCB
SD2_DATA1
SD2_DATA0
SD2_CMD
SD2_DATA3
SD2_DATA2
A1
A2
A3
A4
A5
A6
A7
A8
B1
B2
B3
B4
B5
B6
B7
B8
GND
U8
TXS0108EPW
Includes ESD protection
DAT1
DAT0
VSS
CLK
VDD
VSS
CMD
CD/DAT3
DAT2
SHELL2
SHELL1
WRITE_PROTECT
CARD_DETECT
SD_Card
J3
TE 1775059-1
GND
U28
SN74AVC1T45
VCCA
VCCB
GND
DIR
SD2_CLK
A
B
C168
0.1uF
C169
0.1uF
GND

License: CERN-OHL-S 2.0
Engineer: Lukas F. Hartmann
https://mntre.com
MNT Research GmbH
Sheet: /Reform 2 SD Card/
File: reform2-sd.kicad_sch

Title: MNT Reform 2 SD Card

Size: A4
Date: 2023-02-13
Rev: 2.5D-2
KiCad E.D.A. kicad 7.0.6+dfsg-1
Id: 9/12

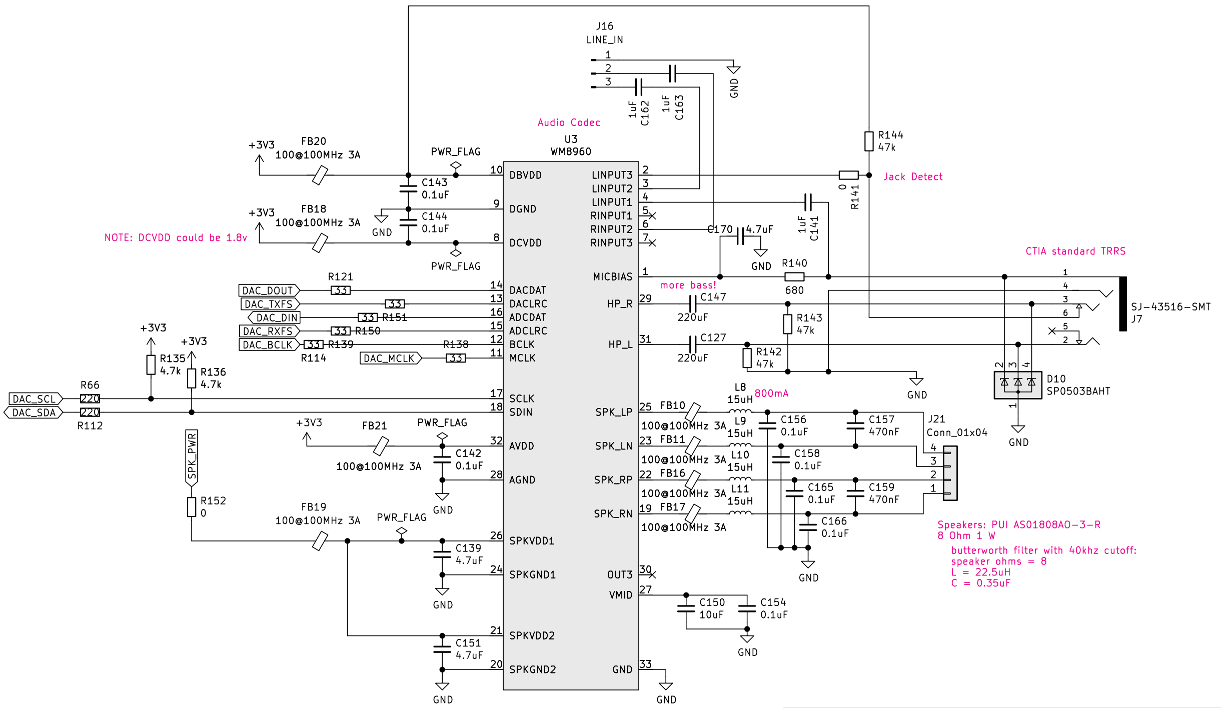
J16
LINE_IN
1
2
3
GND
1uF C162
1uF C163
Audio Codec
U3
WM8960
+3V3
FB20
100@100MHz 3A
PWR_FLAG
C143 0.1uF
GND
+3V3
FB18
100@100MHz 3A
C144 0.1uF
NOTE: DCVDD could be 1.8v
PWR_FLAG
10 DBVDD
9 DGND
8 DCVDD
14 DACDAT
13 DACLRC
16 ADCDAT
15 ADCLRC
12 BCLK
11 MCLK
17 SCLK
18 SDIN
32 AVDD
28 AGND
26 SPKVDD1
24 SPKGND1
21 SPKVDD2
20 SPKGND2
LINPUT3 2
LINPUT2 3
LINPUT1 4
RINPUT1 5
RINPUT2 6
RINPUT3 7
MICBIAS 1
HP_R 29
HP_L 31
SPK_LP 25
SPK_LN 23
SPK_RP 22
SPK_RN 19
OUT3 30
VMID 27
GND 33
R121 33
DAC_DOUT
DAC_TXFS
DAC_DIN
DAC_RXFS
DAC_BCLK
33 R151
33 R150
33 R139
R114
R138
DAC_MCLK
+3V3
+3V3
R135 4.7k
R136 4.7k
R66 220
R112 220
DAC_SCL
DAC_SDA
SPK_PWR
R152 0
+3V3
FB21
100@100MHz 3A
PWR_FLAG
C142 0.1uF
GND
FB19
100@100MHz 3A
PWR_FLAG
C139 4.7uF
GND
C151 4.7uF
GND
GND
R144 47k
R141 0
Jack Detect
1uF C141
C170 4.7uF
GND
R140 680
more bass!
C147 220uF
C127 220uF
R143 47k
R142 47k
GND
CTIA standard TRRS
1 4 3 6 5 2
SJ-43516-SMT
J7
D10
SP0503BAHT
2 3 4 1
GND
L8 15uH
800mA
FB10
100@100MHz 3A
L9 15uH
FB11
100@100MHz 3A
L10 15uH
FB16
100@100MHz 3A
L11 15uH
FB17
100@100MHz 3A
C156 0.1uF
C158 0.1uF
C165 0.1uF
C166 0.1uF
C157 470nF
C159 470nF
GND
J21
Conn_01x04
4 3 2 1
Speakers: PUI AS01808AO-3-R
8 Ohm 1 W
butterworth filter with 40khz cutoff:
speaker ohms = 8
L = 22.5uH
C = 0.35uF
C150 10uF
C154 0.1uF
GND

License: CERN-OHL-S 2.0
Engineer: Lukas F. Hartmann
https://mntre.com
MNT Research GmbH

Sheet: /Reform 2 Audio/
File: reform2-audio.kicad_sch

Title: Reform 2 Audio

Size: A4 Date: 2023-02-13 **Rev: 2.5D-2**
KiCad E.D.A. kicad 7.0.6+dfsg-1 Id: 10/12

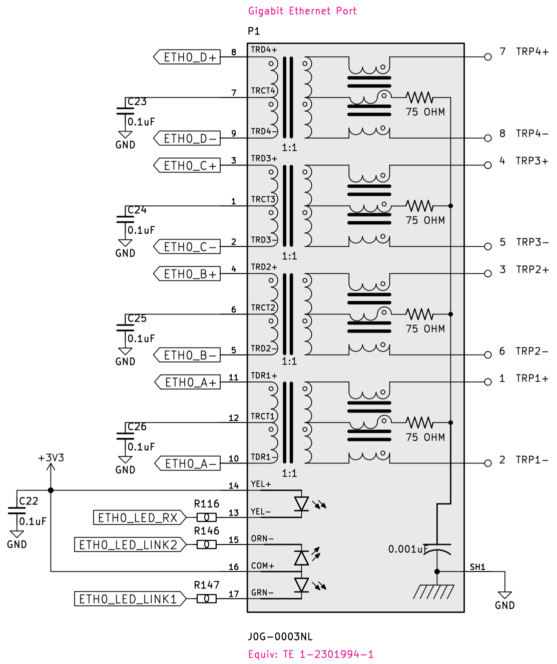
Gigabit Ethernet Port
P1
ETH0_D+
ETH0_D-
ETH0_C+
ETH0_C-
ETH0_B+
ETH0_B-
ETH0_A+
ETH0_A-
C23
C24
C25
C26
0.1uF
GND
TRD4+
TRCT4
TRD4-
TRD3+
TRCT3
TRD3-
TRD2+
TRCT2
TRD2-
TDR1+
TRCT1
TDR1-
YEL+
YEL-
ORN-
COM+
GRN-
1:1
75 OHM
7 TRP4+
8 TRP4-
4 TRP3+
5 TRP3-
3 TRP2+
6 TRP2-
1 TRP1+
2 TRP1-
+3V3
C22
0.1uF
R116
R146
R147
0
ETH0_LED_RX
ETH0_LED_LINK2
ETH0_LED_LINK1
0.001uF
SH1
GND
J0G-0003NL
Equiv: TE 1-2301994-1

License: CERN-OHL-S 2.0
Engineer: Lukas F. Hartmann
https://mntre.com
MNT Research GmbH

Sheet: /Reform 2 Ethernet/
File: reform2-eth.kicad_sch

Title: MNT Reform 2 Ethernet

Size: A4 Date: 2023-02-13 **Rev: 2.5D-2**
KiCad E.D.A. kicad 7.0.6+dfsg-1 Id: 11/12

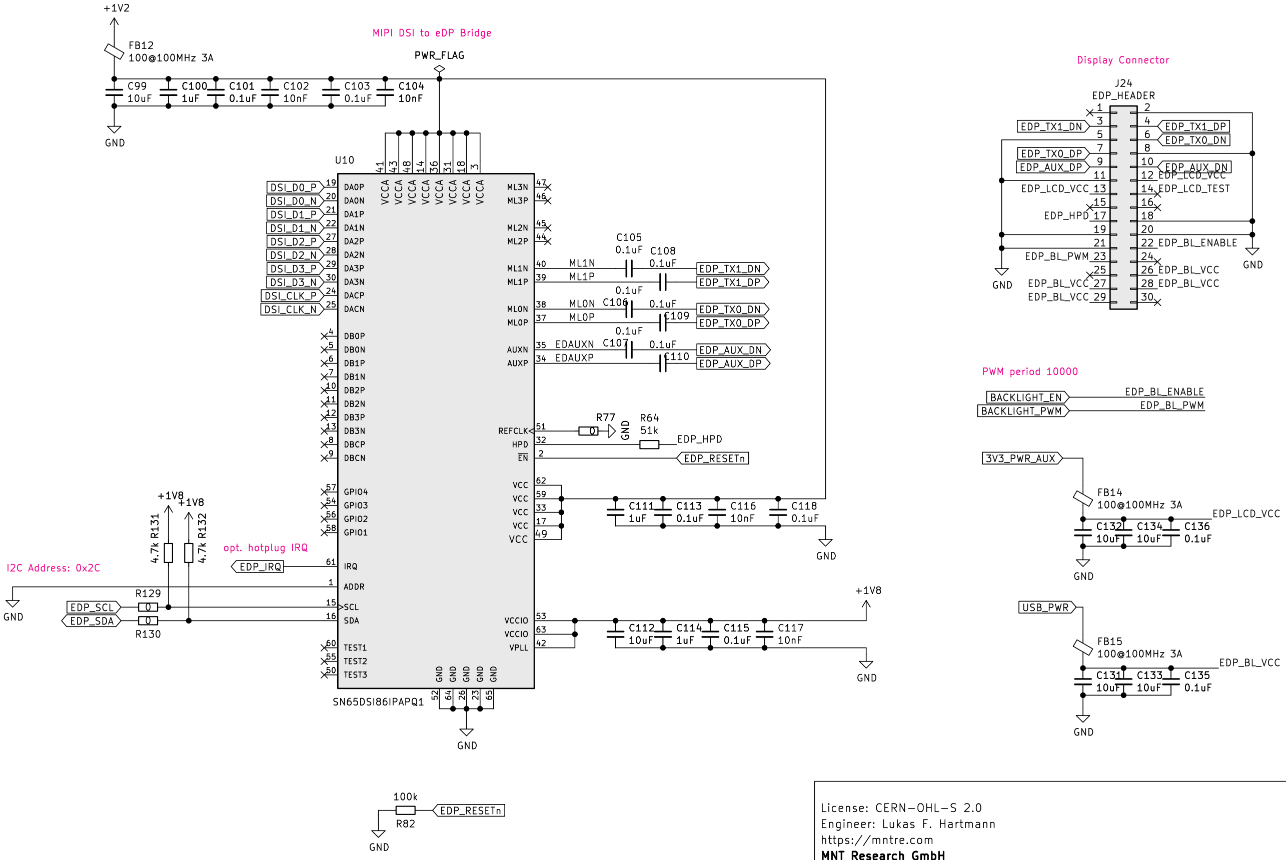
MIPI DSI to eDP Bridge
PWR_FLAG
+1V2
FB12
100@100MHz 3A
C99 10uF
C100 1uF
C101 0.1uF
C102 10nF
C103 0.1uF
C104 10nF
GND
U10
SN65DSI86IPAPQ1
DSI_D0_P
DSI_D0_N
DSI_D1_P
DSI_D1_N
DSI_D2_P
DSI_D2_N
DSI_D3_P
DSI_D3_N
DSI_CLK_P
DSI_CLK_N
DA0P
DA0N
DA1P
DA1N
DA2P
DA2N
DA3P
DA3N
DACP
DACN
DB0P
DB0N
DB1P
DB1N
DB2P
DB2N
DB3P
DB3N
DBCP
DBCN
GPIO4
GPIO3
GPIO2
GPIO1
IRQ
ADDR
SCL
SDA
TEST1
TEST2
TEST3
VCCA
ML3N
ML3P
ML2N
ML2P
ML1N
ML1P
ML0N
ML0P
AUXN
AUXP
REFCLK
HPD
EN
VCC
VCCIO
VPLL
GND
C105 0.1uF
C108 0.1uF
C106 0.1uF
C109 0.1uF
C107 0.1uF
C110 0.1uF
EDAUXN
EDAUXP
EDP_TX1_DN
EDP_TX1_DP
EDP_TX0_DN
EDP_TX0_DP
EDP_AUX_DN
EDP_AUX_DP
R77
R64 51k
EDP_HPD
EDP_RESETn
C111 1uF
C113 0.1uF
C116 10nF
C118 0.1uF
C112 10uF
C114 1uF
C115 0.1uF
C117 10nF
+1V8
opt. hotplug IRQ
EDP_IRQ
I2C Address: 0x2C
EDP_SCL
EDP_SDA
R129
R130
R131 4.7k
R132 4.7k
R82 100k
Display Connector
J24
EDP_HEADER
EDP_LCD_VCC
EDP_LCD_TEST
EDP_HPD
EDP_BL_PWM
EDP_BL_ENABLE
EDP_BL_VCC
PWM period 10000
BACKLIGHT_EN
BACKLIGHT_PWM
3V3_PWR_AUX
FB14
100@100MHz 3A
C132 10uF
C134 10uF
C136 0.1uF
USB_PWR
FB15
100@100MHz 3A
C131 10uF
C133 10uF
C135 0.1uF

License: CERN-OHL-S 2.0
Engineer: Lukas F. Hartmann
https://mntre.com
MNT Research GmbH

Sheet: /Reform 2 Display/
File: reform2-display.kicad_sch

Title: MNT Reform 2 Internal Display

Size: A4 Date: 2023-02-13 **Rev: 2.5D-2**
KiCad E.D.A. kicad 7.0.6+dfsg-1 Id: 12/12

9.2 Motherboard Bill of Materials

Designator	Qty	Value	Brand	Part Number
BT1	1		Keystone	3000
C1 C4-C5 C32 C73 C86 C88 C100 C111 C114 C129-C130 C141 C145-C146 C162-C163	17	1uF	Taiyo Yuden	UMK107BJ105KA-T
C2 C7 C9 C11-C15 C20-C21 C27-C30 C43 C49-C50 C53-C57 C59-C61 C66-C67 C70 C74-C77 C80 C84-C85 C87 C89 C101 C103 C105-C110 C113 C115 C118-C119 C135-C136 C138 C140 C142-C144 C149 C154 C156 C158 C165-C166 C168-C169	64	0.1uF	Yageo	CC0603JPX7R9BB104
C3 C31	2	0.33uF	TDK	C1608X7R1H334K080AC

Designator	Qty	Value	Brand	Part Number
C6 C33 C35 C139 C151 C170	6	4.7uF	TDK	C1608X5R1V475K080AC
C8 C10 C48 C51 C62 C98	6	18pF	Yageo	CC0603JRNPO9BN180
C16-C17	2	100uF	UCC	EMZR500ARA221MHA0G
C18-C19	2	220uF	UCC	EMZR500ARA221MHA0G
C22-C26 C39-C42	9	0.1uF	Yageo	CC0603JPX7R9BB104
C34 C37 C46-C47 C63 C69 C71-C72 C81 C90-C91 C99 C112 C120 C131-C134 C137 C150 C155 C164 C167	23	10uF	Murata	GRM188R6YA106MA73D
C36 C38	2	6.8pF	Vishay	VJ0603A6R8DXQCW1BC
C44 C82 C125 C160	4	2.2uF	Taiyo Yuden	UMK107BBJ225KA-T
C45	1	33nF	KEMET	C0603C333J4REC7411
C52 C58 C102 C104 C116-C117 C128 C148 C152-C153	10	10nF	KEMET	C0603C103K5RAC3190
C64 C68 C78-C79	4	2nF	Murata	GRM1885C1H202JA01D
C65	1	680pF	KEMET	C0603C681J5GACTU
C83 C121 C123-C124 C126	5	47uF	Murata	GRM188R60J476ME15D
C122 C161	2	100uF	Panasonic	EEE-FTH101XAP
C127 C147	2	220uF	Murata	GRM32ER60J227ME05L
C157 C159	2	470nF	Taiyo Yuden	TMK107B7474KA-TR
D1	1		Diodes, Inc.	BZT52C10-7-F
D2 D29-D30	3		Nexperia	BAT46WJ,115

Designator	Qty	Value	Brand	Part Number
D3-D4 D6	3		Diodes, Inc.	SBR0560S1-7
D5	1		ROHM	RBR3MM60ATFTR
D7	1		Diodes, Inc.	BZT52C6V2-7-F
D8	1		ROHM	SML-D12Y1WT86
D9	1		ROHM	SML-D12Y1WT86
D10	1		Littelfuse	SP0503BAHT
D11	1		ROHM	SMLEN3WBC8W1
D12	1		ROHM	SMLEN3WBC8W1
D13	1		Vishay	SMAJ36CA-E3/5A
D14	1		AVX	SD0603S040S0R2
D15-D16	2		Vishay	BZX584C3V3-G3-08
D17-D19 D24-D28	8		Nexperia	PMEG60T10ELRX
D20-D21	2		MCC	SK54A-LTP
D22	1		ROHM	SMLEN3WBC8W1
D23	1		ROHM	SMLEN3WBC8W1
F1-F3	3		Littelfuse	0157004.DR
FB1-FB2 FB5-FB9	7		Murata	BLM18PG221SH1D
FB3-FB4 FB10-FB12 FB14-FB22	14		Murata	BLM18KG101TN1D
H1	1		Wurth	9774020243R
H22 H24-H25 H27	4		Wurth	9774025243R
J1	1		Würth	694106301002
J2	1		Molex	504050-0591
J3	1		TE	1775059-1
J4	1		Wurth	685119134923
J5-J6 J17	3		Wurth	692121030100
J7	1		CUI	SJ-43516-SMT-TR
J8	1		Korean Hroparts	TYPE-C-31-M-12
J9	1		JST	B4B-PH-K-S(LF)(SN)
J10	1		TE	1-2199230-6
J11	1		Molex	48099-5701
J12	1		Harwin	M40-3200845R
J13	1		Molex	504050-0591
J14	1		JST	B4B-PH-K-S(LF)(SN)
J15	1		Hirose	FH12-33S-0.5SH(55)

Designator	Qty	Value	Brand	Part Number
J16	1		Generic	3P 2mm pitch THT header
J18	1		Wurth	61300311021
J19	1		Amphenol FCI	20021111-00010T4LF
J20	1		Wurth	61300311121
J21	1		JST	B4B-PH-K-S(LF)(SN)
J22	1		Molex	87914-1616
J23	1		JST	B4B-PH-K-S(LF)(SN)
J24	1		Molex / Würth	87758-3016 / 687133149022
L1	1	22uH 5A	Wurth	7447709220
L2	1		Vishay Dale	IMC1210ER100K
L3-L4	2	68uH	Bourns	SRR1210-680M
L5	1	10uH	Taiyo Yuden	CBC3225T100MRV
L6-L7	2	2.2uH	Taiyo Yuden	BRL3225T2R2M
L8-L11	4	15uH	Murata	LQH32PB150MN0L
P1	1		Pulse	J0G-0003NL
Q1-Q2 Q15 Q17	4		Vishay Siliconix	SI7850DP-T1-E3
Q3 Q18	2		Vishay Siliconix	SI7461DP-T1-E3
Q4	1		Nexperia	PMV50ENEAR
Q5-Q12	8		Nexperia	PMV50EPEAR
R1 R7 R39 R51 R65 R73-R78 R81 R98 R101 R104-R109 R111 R116 R124-R126 R129-R130 R137 R141 R146-R147 R152 R154-R155 R157 R182 R185-R186 R193-R194	40	0Ω	Vishay Dale	CRCW06030000Z0EAC

Designator	Qty	Value	Brand	Part Number
R2 R9 R45 R54 R62-R63 R83-R85 R95 R113 R115 R128 R161 R172 R196	16	10kΩ	Yageo	RC0603FR-0710KL
R3 R8 R46 R56 R58 R82 R86 R94 R103 R120 R160 R178-R179 R181 R188-R189	16	100kΩ	Vishay Dale	CRCW0603100KJNEAC
R4-R6 R55 R61 R96-R97 R153	8	1MΩ	Yageo	RC0603FR-071ML
R10-R16 R175-R176	9	100Ω	Vishay Dale	CRCW0603100RFKEAC
R17-R24	8	3.3kΩ	Vishay Dale	CRCW06033K30FKEAC
R25-R32	8	15Ω	TE Connectivity	CRGCQ2512J15R
R33 R43-R44 R68-R69 R131-R132 R135-R136 R164 R174	11	4.7kΩ	Yageo	RC0603FR-074K7L
R34 R180	2	150kΩ	Vishay Dale	CRCW0603150KFKEAC
R35 R37-R38 R40 R42 R71 R122 R195	8	1.5kΩ	Yageo	RC0603FR-071K5L
R36	1	475Ω	Yageo	RC0603FR-07475RL
R41 R177	2	0.02Ω	ROHM	LTR18EZPFSR020
R47-R48 R80 R142-R144 R197	7	47kΩ	Vishay Dale	CRCW060347K0FKEAC

Designator	Qty	Value	Brand	Part Number
R49-R50	2	0.01Ω	ROHM	LTR18EZPFU10L0
R53 R57 R64	3	51kΩ	Yageo	RC0603FR-0751KL
R59	1	9.09kΩ 1%	Vishay Dale	CRCW06039K09FKTA
R60	1	90.9kΩ 1%	Vishay Dale	CRCW060390K9FKEA
R66 R112	2	220Ω	Yageo	RC0603FR-07220RL
R67 R110 R183-R184	4	1kΩ	Yageo	RC0603FR-071KL
R70 R72 R114 R121 R138-R139 R150-R151	8	33Ω	Vishay Dale	CRCW060333R0FKEAC
R79	1	100kΩ NTC	Vishay / BC	NTCS0603E3104FXT
R90-R93	4	27Ω	Yageo	RC0603FR-0727RL
R117-R119 R168-R171	7	10k-DNP	Yageo	RC0603FR-0710KL
R123 R148 R198-R199	4	49.9Ω	Yageo	RC0603FR-1049R9L
R140	1	680Ω	Yageo	RC0603FR-07680RL
R156	1	1MΩ	Yageo	RC0603FR-071ML
R167	1	62Ω	Yageo	RC0603FR-0762RL
R173	1	49.9kΩ	Vishay Dale	CRCW060349K9FKEAC
R192	1	27kΩ	Bourns	CR0603-FX-2702ELF
SW1 SW3	2		Apem	DM01
SW2 SW6	2		USAKRO	UK-B0206-G3.8-250-JZ
U1	1		TE	1717254-1
U2	1		Analog Devices	LTC4020EUHF#PBF
U3	1		Cirrus Logic	WM8960CGEFL/V
U4	1		Analog Devices	LTC6803IG-4#PBF
U5	1		NXP	PCF8523T/1,118
U6	1		TI	INA233
U7	1		Texas Instruments	LM2677SX-5
U8	1		Texas Instruments	TXS0108EPW
U9	1		Texas Instruments	TUSB8040PFP

Designator	Qty	Value	Brand	Part Number
U10	1		Texas Instruments	SN65DSI86IPAPQ1
U11	1		Molex	67910-5700
U12	1		Texas Instruments	LM2677S-3.3/NOPB
U13 U19	2		Texas Instruments	TLV62568DBVR
U14	1		Texas Instruments	LMR16006YQ3
U17	1		Texas Instruments	TLV1117-18CDCYR
U18	1		NXP	LPC11U24FBD48-301
U20 U24 U27	3		Diodes, Inc.	AP22815AWT-7
U21 U25-U26	3		Littelfuse	SP3012-06UTG
U22	1		Texas Instruments	TPD12S521
U23	1		IDT	5V41066PGGI8
U28	1		Texas Instruments	SN74AVC1T45
Y1	1	24MHz	Seiko Epson	X1E0000210264
Y2	1	12MHz	Abracon	ABM8AIG-12.000MHz-2-T
Y3	1	25MHz	Abracon	ABM8AIG-25.000MHz-R40-4-T
Y4	1	32.768 kHz	ECS	ECS-.327-7-34B-TR

9.3 Keyboard Schematics

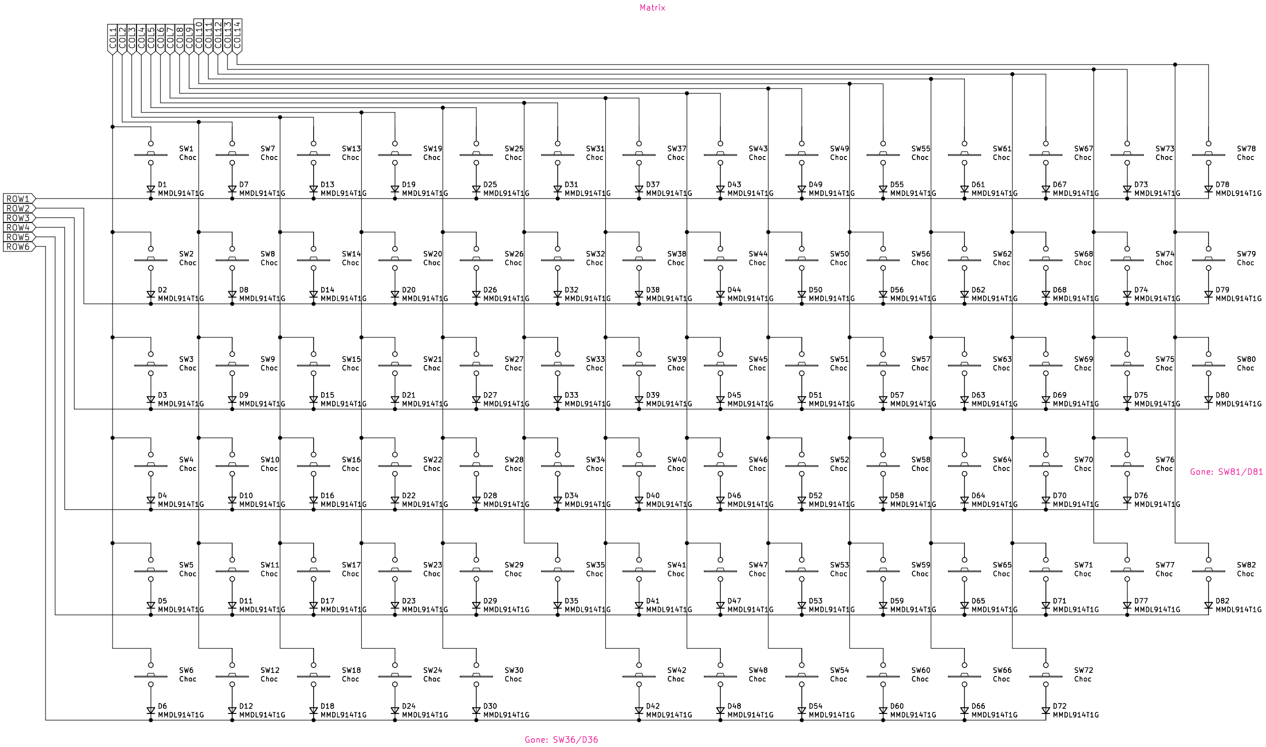
Matrix
COL1
COL2
COL3
COL4
COL5
COL6
COL7
COL8
COL9
COL10
COL11
COL12
COL13
COL14
ROW1
ROW2
ROW3
ROW4
ROW5
ROW6
SW1 Choc
D1 MMDL914T1G
SW7 Choc
D7 MMDL914T1G
SW13 Choc
D13 MMDL914T1G
SW19 Choc
D19 MMDL914T1G
SW25 Choc
D25 MMDL914T1G
SW31 Choc
D31 MMDL914T1G
SW37 Choc
D37 MMDL914T1G
SW43 Choc
D43 MMDL914T1G
SW49 Choc
D49 MMDL914T1G
SW55 Choc
D55 MMDL914T1G
SW61 Choc
D61 MMDL914T1G
SW67 Choc
D67 MMDL914T1G
SW73 Choc
D73 MMDL914T1G
SW78 Choc
D78 MMDL914T1G
SW2 Choc
D2 MMDL914T1G
SW8 Choc
D8 MMDL914T1G
SW14 Choc
D14 MMDL914T1G
SW20 Choc
D20 MMDL914T1G
SW26 Choc
D26 MMDL914T1G
SW32 Choc
D32 MMDL914T1G
SW38 Choc
D38 MMDL914T1G
SW44 Choc
D44 MMDL914T1G
SW50 Choc
D50 MMDL914T1G
SW56 Choc
D56 MMDL914T1G
SW62 Choc
D62 MMDL914T1G
SW68 Choc
D68 MMDL914T1G
SW74 Choc
D74 MMDL914T1G
SW79 Choc
D79 MMDL914T1G
SW3 Choc
D3 MMDL914T1G
SW9 Choc
D9 MMDL914T1G
SW15 Choc
D15 MMDL914T1G
SW21 Choc
D21 MMDL914T1G
SW27 Choc
D27 MMDL914T1G
SW33 Choc
D33 MMDL914T1G
SW39 Choc
D39 MMDL914T1G
SW45 Choc
D45 MMDL914T1G
SW51 Choc
D51 MMDL914T1G
SW57 Choc
D57 MMDL914T1G
SW63 Choc
D63 MMDL914T1G
SW69 Choc
D69 MMDL914T1G
SW75 Choc
D75 MMDL914T1G
SW80 Choc
D80 MMDL914T1G
SW4 Choc
D4 MMDL914T1G
SW10 Choc
D10 MMDL914T1G
SW16 Choc
D16 MMDL914T1G
SW22 Choc
D22 MMDL914T1G
SW28 Choc
D28 MMDL914T1G
SW34 Choc
D34 MMDL914T1G
SW40 Choc
D40 MMDL914T1G
SW46 Choc
D46 MMDL914T1G
SW52 Choc
D52 MMDL914T1G
SW58 Choc
D58 MMDL914T1G
SW64 Choc
D64 MMDL914T1G
SW70 Choc
D70 MMDL914T1G
SW76 Choc
D76 MMDL914T1G
Gone: SW81/D81
SW5 Choc
D5 MMDL914T1G
SW11 Choc
D11 MMDL914T1G
SW17 Choc
D17 MMDL914T1G
SW23 Choc
D23 MMDL914T1G
SW29 Choc
D29 MMDL914T1G
SW35 Choc
D35 MMDL914T1G
SW41 Choc
D41 MMDL914T1G
SW47 Choc
D47 MMDL914T1G
SW53 Choc
D53 MMDL914T1G
SW59 Choc
D59 MMDL914T1G
SW65 Choc
D65 MMDL914T1G
SW71 Choc
D71 MMDL914T1G
SW77 Choc
D77 MMDL914T1G
SW82 Choc
D82 MMDL914T1G
SW6 Choc
D6 MMDL914T1G
SW12 Choc
D12 MMDL914T1G
SW18 Choc
D18 MMDL914T1G
SW24 Choc
D24 MMDL914T1G
SW30 Choc
D30 MMDL914T1G
SW42 Choc
D42 MMDL914T1G
SW48 Choc
D48 MMDL914T1G
SW54 Choc
D54 MMDL914T1G
SW60 Choc
D60 MMDL914T1G
SW66 Choc
D66 MMDL914T1G
SW72 Choc
D72 MMDL914T1G
Gone: SW36/D36

Reform KBD MCU
File: reform-kbd-mcu.kicad_sch

Reform KBD Backlight
File: reform2-keyboard-backlight.kicad_sch

License: CERN-OHL-S 2.0
Engineer: Lukas F. Hartmann
https://mntre.com
Copyright 2017–2023 MNT Research GmbH
Sheet: /
File: reform2-keyboard3.kicad_sch
Title: MNT Reform 2 Keyboard
Size: A3 Date: 2023-01-17 **Rev: 2.0R-3**
KiCad E.D.A. kicad 7.0.6+dfsg-1 Id: 1/3

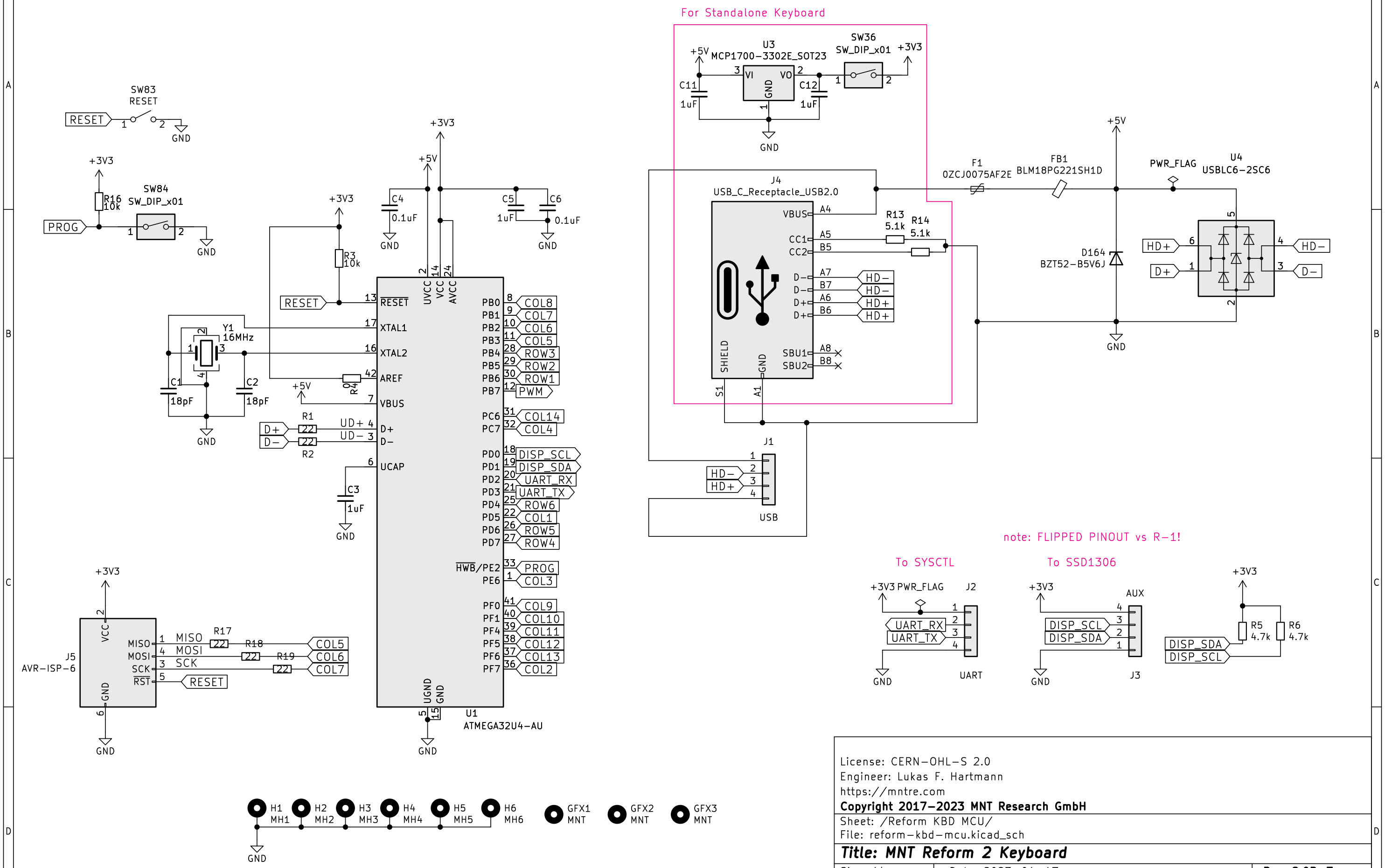
For Standalone Keyboard
SW83 RESET
RESET
GND
+3V3
R16 10k
SW84 SW_DIP_x01
PROG
GND
+3V3
+5V
C4 0.1uF
C5 1uF
C6 0.1uF
GND
+3V3
R3 10k
RESET
Y1 16MHz
C1 18pF
C2 18pF
R4 0
+5V
D+
D-
R1 22
R2 22
UD+
UD-
C3 1uF
U1 ATMEGA32U4-AU
UVCC
VCC
AVCC
RESET
XTAL1
XTAL2
AREF
VBUS
D+
D-
UCAP
UGND
GND
PB0 COL8
PB1 COL7
PB2 COL6
PB3 COL5
PB4 ROW3
PB5 ROW2
PB6 ROW1
PB7 PWM
PC6 COL14
PC7 COL4
PD0 DISP_SCL
PD1 DISP_SDA
PD2 UART_RX
PD3 UART_TX
PD4 ROW6
PD5 COL1
PD6 ROW5
PD7 ROW4
HWB/PE2 PROG
PE6 COL3
PF0 COL9
PF1 COL10
PF4 COL11
PF5 COL12
PF6 COL13
PF7 COL2
J5 AVR-ISP-6
VCC
MISO
MOSI
SCK
RST
GND
R17 22
R18 22
R19 22
COL5
COL6
COL7
RESET
H1 MH1
H2 MH2
H3 MH3
H4 MH4
H5 MH5
H6 MH6
GFX1 MNT
GFX2 MNT
GFX3 MNT
U3 MCP1700-3302E_SOT23
VI
VO
GND
C11 1uF
C12 1uF
SW36 SW_DIP_x01
+3V3
+5V
J4 USB_C_Receptacle_USB2.0
VBUS
CC1
CC2
D-
D+
SBU1
SBU2
SHIELD
GND
A4
A5
B5
A7
B7
A6
B6
A8
B8
S1
A1
R13 5.1k
R14 5.1k
HD-
HD+
F1 0ZCJ0075AF2E
FB1 BLM18PG221SH1D
D164 BZT52-B5V6J
PWR_FLAG
U4 USBLC6-2SC6
HD+
D+
HD-
D-
J1
USB
note: FLIPPED PINOUT vs R-1!
To SYSCTL
To SSD1306
J2
UART
UART_RX
UART_TX
+3V3
PWR_FLAG
J3
AUX
DISP_SCL
DISP_SDA
R5 4.7k
R6 4.7k
GND

License: CERN-OHL-S 2.0
Engineer: Lukas F. Hartmann
https://mntre.com
Copyright 2017-2023 MNT Research GmbH
Sheet: /Reform KBD MCU/
File: reform-kbd-mcu.kicad_sch

Title: MNT Reform 2 Keyboard

Size: A4 Date: 2023-01-17 **Rev: 2.0R-3**
KiCad E.D.A. kicad 7.0.6+dfsg-1 Id: 2/3

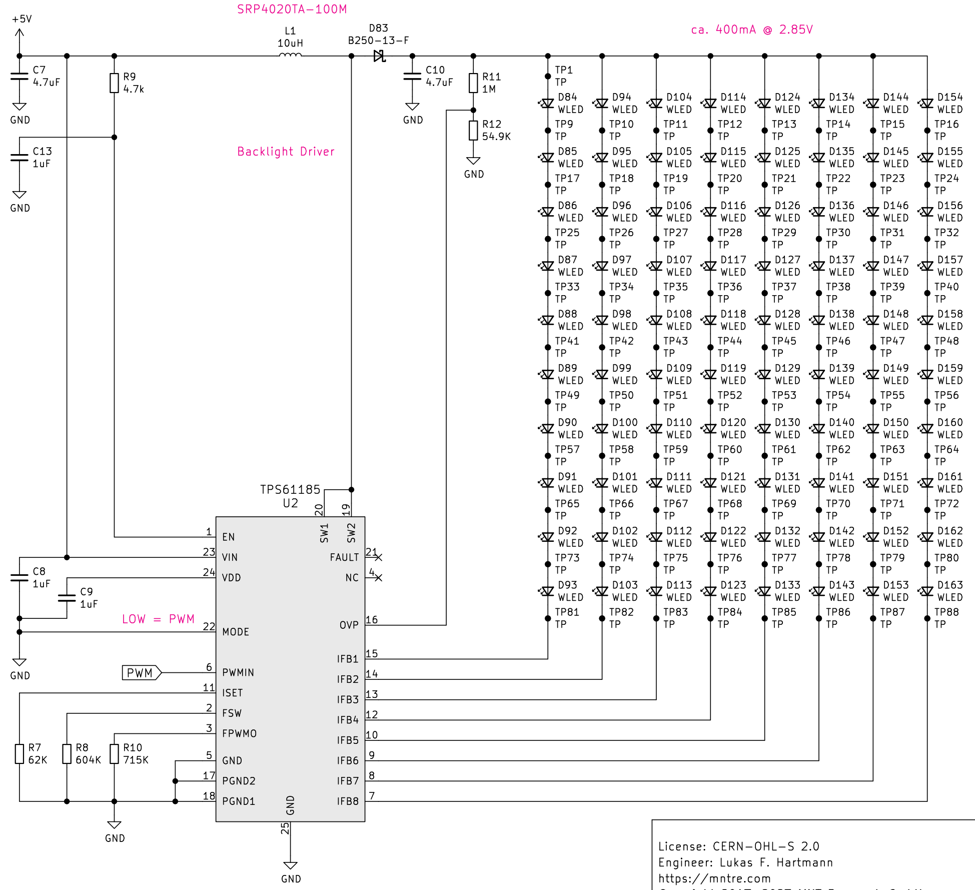
SRP4020TA-100M
+5V
L1
10uH
D83
B250-13-F
ca. 400mA @ 2.85V
C7
4.7uF
GND
R9
4.7k
C13
1uF
GND
C10
4.7uF
GND
R11
1M
R12
54.9K
GND
Backlight Driver
TP1 TP
D84 WLED
TP9 TP
D85 WLED
TP17 TP
D86 WLED
TP25 TP
D87 WLED
TP33 TP
D88 WLED
TP41 TP
D89 WLED
TP49 TP
D90 WLED
TP57 TP
D91 WLED
TP65 TP
D92 WLED
TP73 TP
D93 WLED
TP81 TP
D94 WLED
TP10 TP
D95 WLED
TP18 TP
D96 WLED
TP26 TP
D97 WLED
TP34 TP
D98 WLED
TP42 TP
D99 WLED
TP50 TP
D100 WLED
TP58 TP
D101 WLED
TP66 TP
D102 WLED
TP74 TP
D103 WLED
TP82 TP
D104 WLED
TP11 TP
D105 WLED
TP19 TP
D106 WLED
TP27 TP
D107 WLED
TP35 TP
D108 WLED
TP43 TP
D109 WLED
TP51 TP
D110 WLED
TP59 TP
D111 WLED
TP67 TP
D112 WLED
TP75 TP
D113 WLED
TP83 TP
D114 WLED
TP12 TP
D115 WLED
TP20 TP
D116 WLED
TP28 TP
D117 WLED
TP36 TP
D118 WLED
TP44 TP
D119 WLED
TP52 TP
D120 WLED
TP60 TP
D121 WLED
TP68 TP
D122 WLED
TP76 TP
D123 WLED
TP84 TP
D124 WLED
TP13 TP
D125 WLED
TP21 TP
D126 WLED
TP29 TP
D127 WLED
TP37 TP
D128 WLED
TP45 TP
D129 WLED
TP53 TP
D130 WLED
TP61 TP
D131 WLED
TP69 TP
D132 WLED
TP77 TP
D133 WLED
TP85 TP
D134 WLED
TP14 TP
D135 WLED
TP22 TP
D136 WLED
TP30 TP
D137 WLED
TP38 TP
D138 WLED
TP46 TP
D139 WLED
TP54 TP
D140 WLED
TP62 TP
D141 WLED
TP70 TP
D142 WLED
TP78 TP
D143 WLED
TP86 TP
D144 WLED
TP15 TP
D145 WLED
TP23 TP
D146 WLED
TP31 TP
D147 WLED
TP39 TP
D148 WLED
TP47 TP
D149 WLED
TP55 TP
D150 WLED
TP63 TP
D151 WLED
TP71 TP
D152 WLED
TP79 TP
D153 WLED
TP87 TP
D154 WLED
TP16 TP
D155 WLED
TP24 TP
D156 WLED
TP32 TP
D157 WLED
TP40 TP
D158 WLED
TP48 TP
D159 WLED
TP56 TP
D160 WLED
TP64 TP
D161 WLED
TP72 TP
D162 WLED
TP80 TP
D163 WLED
TP88 TP
TPS61185
U2
1 EN
23 VIN
24 VDD
22 MODE
6 PWMIN
11 ISET
2 FSW
3 FPWMO
5 GND
17 PGND2
18 PGND1
20 SW1
19 SW2
21 FAULT
4 NC
16 OVP
15 IFB1
14 IFB2
13 IFB3
12 IFB4
10 IFB5
9 IFB6
8 IFB7
7 IFB8
25 GND
GND
C8
1uF
C9
1uF
LOW = PWM
GND
PWM
R7
62K
R8
604K
R10
715K
GND

License: CERN-OHL-S 2.0
Engineer: Lukas F. Hartmann
https://mntre.com
Copyright 2017–2023 MNT Research GmbH
Sheet: /Reform KBD Backlight/
File: reform2-keyboard-backlight.kicad_sch

Title: MNT Reform 2 Keyboard

Size: A4	Date: 2023-01-17	**Rev: 2.0R-3**
KiCad E.D.A.	kicad 7.0.6+dfsg-1	Id: 3/3

9.4 Keyboard Bill of Materials

Designator	Qty	Value	Brand	Part Number
C1-C2	2	18pF	Yageo	CC0603JRNPO9BN180
C3 C5 C8-C9 C11-C13	7	1uF	Yageo	CC0603KRX5R8BB105
C4 C6	2	0.1uF	Yageo	CC0603KRX7R9BB104
C7 C10	2	4.7uF	Murata	GRM188R61E475KE11D
D1-D35 D37-D80 D82	80		MDD	1N4007WS
D83	1		UMW	SS26
D84-D163	80		Meihua	MHT192WDT-C2
D164	1		MDD	BZT52C5V6
F1	1		TECHFUSE	nSMD100-16V
FB1	1		Murata	BLM18PG121SN1D
H1	1		DNP	DNP
H2	1		DNP	DNP
H3	1		DNP	DNP
H4	1		DNP	DNP
H5	1		DNP	DNP
H6	1		DNP	DNP
J1	1		JST	S4B-PH-SM4-K-TB(LF)(SN)
J2	1		JST	S4B-PH-SM4-K-TB(LF)(SN)
J3	1		XFCN	F1002-B-04-20T-R
J4	1		Korean Hroparts	TYPE-C-31-M-12
J5	1		DNP	DNP
L1	1	10uH	Sunlord	WPN4020H100MT
R1-R2 R17-R19	5	22Ω	Yageo	RC0603FR-0722RL
R3 R16	2	10kΩ	Yageo	RC0603JR-0710KL
R4	1	0Ω	Yageo	RC0603JR-070RL
R5-R6 R9	3	4.7kΩ	Yageo	RC0603JR-074K7L
R7	1	62kΩ	Yageo	RC0603FR-0762KL
R8	1	604kΩ	Yageo	RC0603FR-07604KL
R10	1	715kΩ	Yageo	RC0603FR-07715KL
R11	1	1MΩ	Yageo	RC0603JR-071ML

Designator	Qty	Value	Brand	Part Number
R12	1	54.9kΩ	Yageo	AC0603FR-0754K9L
R13-R14	2	5.1kΩ	Yageo	RC0603FR-075K1L
SW1-SW35 SW37-SW80 SW82	80		Kailh	CPG135001D02
SW36 SW84	2		Dongguan Guangzhu	DSIC01LSGET
SW83	1		XKB	TS-1185EC-C-D-B
U1	1		Microchip	ATMEGA32U4-AU / RC
U2	1		Texas Instruments	TPS61185RGET
U3	1		Microchip	MCP1700T-3302E/TT
U4	1		UMW	USBLC6-2SC6
Y1	1	16MHz	Yangxing	X322516MRB4SI

9.5 OLED Schematics

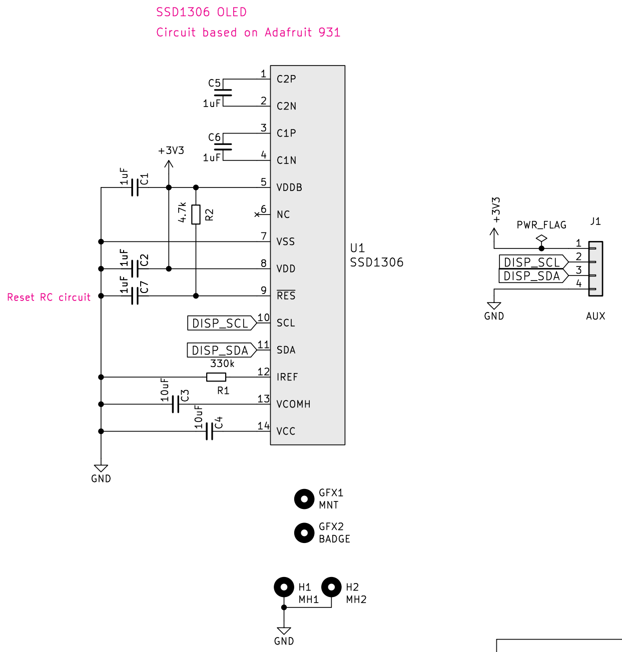
SSD1306 OLED
Circuit based on Adafruit 931
U1
SSD1306
C2P
C2N
C1P
C1N
VDDB
NC
VSS
VDD
RES
SCL
SDA
IREF
VCOMH
VCC
C5
1uF
C6
1uF
C1
1uF
C2
1uF
C7
1uF
C3
10uF
C4
10uF
R1
330k
R2
4.7k
+3V3
GND
DISP_SCL
DISP_SDA
Reset RC circuit
GFX1
MNT
GFX2
BADGE
H1
MH1
H2
MH2
J1
AUX
PWR_FLAG

License: CERN-OHL-S 2.0
Engineer: Lukas F. Hartmann
https://mntre.com
MNT Research GmbH

Sheet: /
File: reform2-oled.kicad_sch

Title: MNT Reform 2 Keyboard OLED

Size: A4 Date: 2020-09-08 **Rev: 2.0R-1**
KiCad E.D.A. kicad 7.0.6+dfsg-1 Id: 1/1

Designator	Qty	Value	Brand	Part Number
C1-C2 C5-C7	5	1uF	Yageo	CC0603KRX5R8BB105
C3-C4	2	10uF	Taiyo Yuden	LMK107BJ106MALTD
H1	1			DNP
H2	1			DNP
J1	1		XFCN	F1002-B-04-20T-R
R1	1	330kΩ	Yageo	RC0603FR-07330KL
R2	1	4.7kΩ	Yageo	RC0603FR-074K7L
U1	1		Enrich Electronics	ENH-OB00910003

9.6 Trackball Schematics

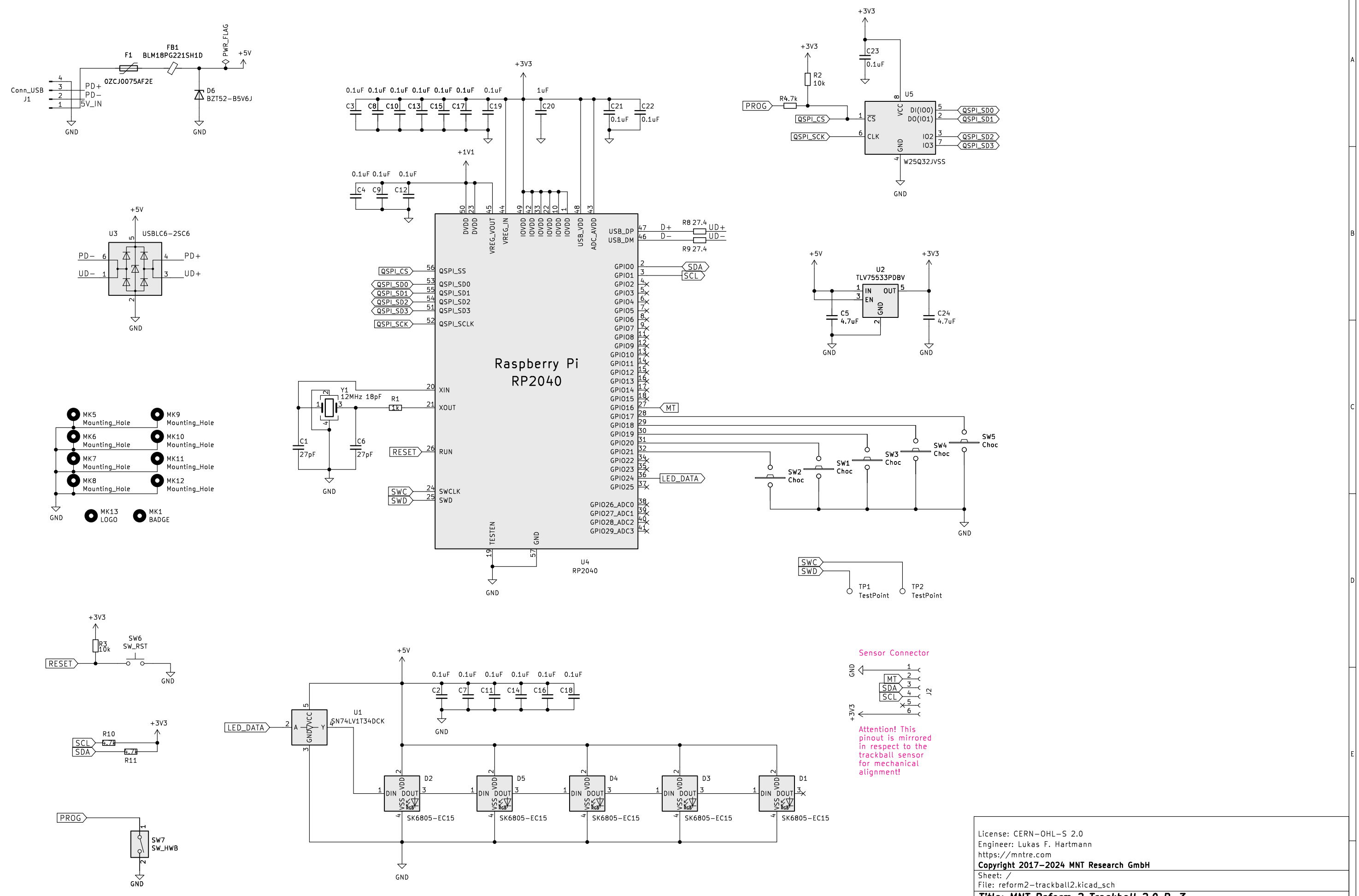
F1
0ZCJ0075AF2E
FB1
BLM18PG221SH1D
PWR_FLAG
+5V
Conn_USB
J1
PD+
PD-
5V_IN
D6
BZT52-B5V6J
GND
+3V3
C3
C8
C10
C13
C15
C17
C19
C20
C21
C22
0.1uF
1uF
+1V1
C4
C9
C12
U3
USBLC6-2SC6
PD-
PD+
UD-
UD+
Raspberry Pi
RP2040
U4
RP2040
XIN
XOUT
RUN
SWCLK
SWD
TESTEN
GND
DVDD
VREG_VOUT
VREG_IN
IOVDD
USB_VDD
ADC_AVDD
USB_DP
USB_DM
QSPI_SS
QSPI_SD0
QSPI_SD1
QSPI_SD2
QSPI_SD3
QSPI_SCLK
QSPI_CS
QSPI_SCK
GPIO0
GPIO1
GPIO2
GPIO3
GPIO4
GPIO5
GPIO6
GPIO7
GPIO8
GPIO9
GPIO10
GPIO11
GPIO12
GPIO13
GPIO14
GPIO15
GPIO16
GPIO17
GPIO18
GPIO19
GPIO20
GPIO21
GPIO22
GPIO23
GPIO24
GPIO25
GPIO26_ADC0
GPIO27_ADC1
GPIO28_ADC2
GPIO29_ADC3
R8 27.4
R9 27.4
D+
D-
UD+
UD-
SDA
SCL
MT
LED_DATA
RESET
SWC
SWD
Y1
12MHz 18pF
R1
1k
C1
27pF
C6
27pF
MK5
MK6
MK7
MK8
MK9
MK10
MK11
MK12
Mounting_Hole
MK13
LOGO
MK1
BADGE
U5
W25Q32JVSS
VCC
CS
CLK
DI(IO0)
DO(IO1)
IO2
IO3
C23
0.1uF
R2
10k
R4.7k
PROG
U2
TLV75533PDBV
IN
EN
OUT
C5
4.7uF
C24
4.7uF
SW1
SW2
SW3
SW4
SW5
Choc
TP1
TP2
TestPoint
R3
10k
SW6
SW_RST
R10
R11
4.7k
SW7
SW_HWB
U1
SN74LV1T34DCK
A
Y
VCC
C2
C7
C11
C14
C16
C18
D1
D2
D3
D4
D5
SK6805-EC15
DIN
DOUT
VDD
VSS
RGB
J2

Sensor Connector

Attention! This pinout is mirrored in respect to the trackball sensor for mechanical alignment!

License: CERN-OHL-S 2.0
Engineer: Lukas F. Hartmann
https://mntre.com
Copyright 2017–2024 MNT Research GmbH
Sheet: /
File: reform2-trackball2.kicad_sch
Title: MNT Reform 2 Trackball 2.0 R-3
Size: A3 | Date: 2023-11-30 | **Rev: 2.0R-3**
KiCad E.D.A. kicad 7.0.6+dfsg-1 | Id: 1/1

9.7 Trackball Bill of Materials

Designator	Qty	Value	Brand	Part Number
C1 C6	2	27pF	Yageo	CC0603JRNPO9BN270
C2-C4 C7-C19 C21-C23	19	0.1uF	Yageo	CC0603JPX7R9BB104
C5 C24	2	4.7uF	Murata	GRM188R61E475KE11D
C20	1	1uF	Yageo	CC0603KRX5R8BB105
D1-D5	5		OPSCO	SK6805-EC15
D6	1		Nexperia	BZT52-B5V6J
F1	1		TECHFUSE	nSMD100-16V
FB1	1		Murata	BLM18PG221SH1D
J1	1		JST	B4B-PH-K-S(LF)(SN)
J2	1		Hirose	FH12-6S-0.5SH(55)
R1	1	1kΩ	Yageo	RC0603FR-071KL
R2-R3	2	10kΩ	Yageo	RC0603JR-0710KL
R4 R10-R11	3	4.7kΩ	Yageo	RC0603FR-074K7L
R8-R9	2	27.4Ω	Yageo	RC0603FR-0727R4L
SW1-SW5	5		Kailh	CPG135001D03
SW6	1		XKB	TS-1185EC-C-D-B
SW7	1		Dongguan Guangzhu	DSIC01LSGET
U1	1		Texas Instruments	SN74LV1T34DCKR
U2	1		Texas Instruments	TLV75533PDBVR
U3	1		STMicro	USBLC6-2SC6
U4	1		Raspberry Pi	RP2040
U5	1		Winbond	W25Q32JVSS
Y1	1	12MHz 18pF	Seiko Epson	Q22FA23V0041800

9.8 Trackball Sensor Schematics

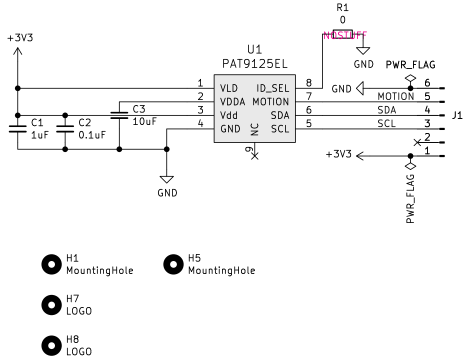
R1
0
NOSTUFF
+3V3
U1
PAT9125EL
GND
PWR_FLAG
1
2
3
4
VLD
VDDA
Vdd
GND
NC
9
ID_SEL
MOTION
SDA
SCL
8
7
6
5
GND
MOTION
SDA
SCL
6
5
4
3
2
1
J1
C1
1uF
C2
0.1uF
C3
10uF
GND
+3V3
PWR_FLAG
H1
MountingHole
H5
MountingHole
H7
LOGO
H8
LOGO

License: CERN–OHL–S 2.0
Engineer: Lukas F. Hartmann
https://mntre.com
MNT Research GmbH

Sheet: /
File: reform2–trackball–sensor.kicad_sch

Title: MNT Reform Trackball Sensor

Size: A4 Date: 2020–09–08 **Rev: 2.0R–1**
KiCad E.D.A. kicad 7.0.6+dfsg–1 Id: 1/1

9.9 Trackball Sensor Bill of Materials

Designator	Qty	Value	Brand	Part Number
C1	1	1uF	TDK	C1608X8L1C105K080AC
C2	1	0.1uF	Yageo	CC0603JPX7R9BB104
C3	1	10uF	Taiyo Yuden	LMK107BBJ106KALT
J1	1		Hirose	FH12-6S-0.5SH(55)
R1	1	0Ω	DNP	DNP
U1	1		PixArt Imaging	PAT9125EL

9.10 Trackpad Schematics

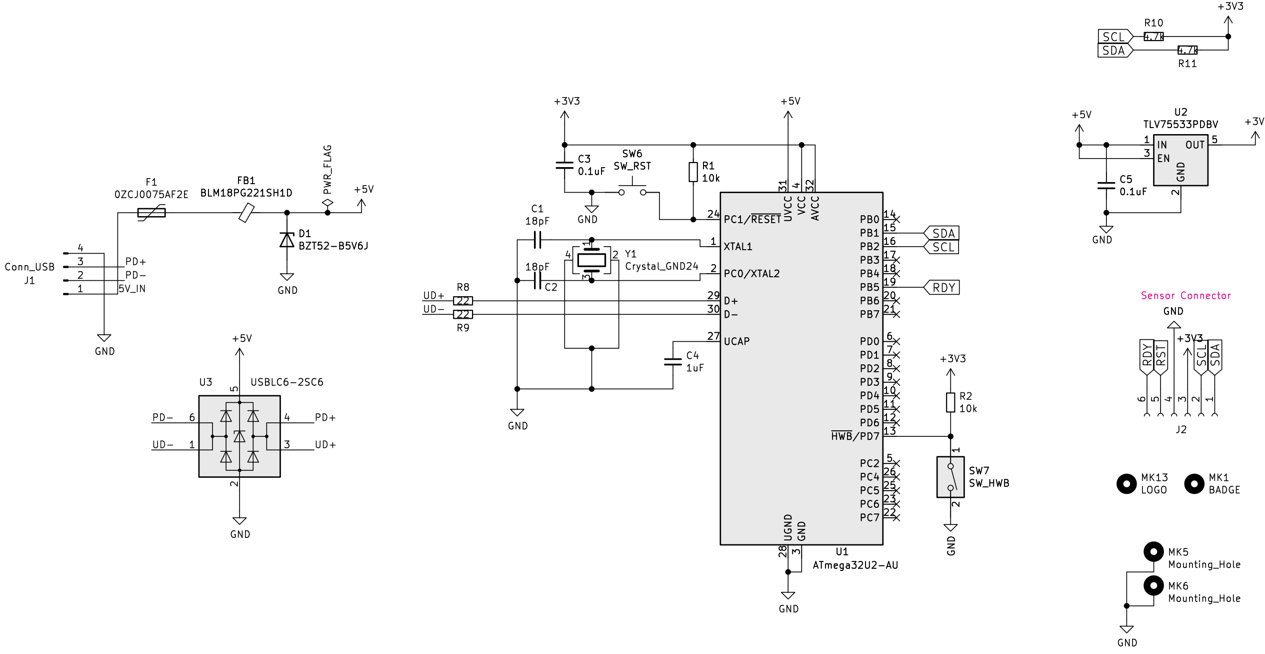

SCL
SDA
R10
4.7k
R11
4.7k
+3V3
U2
TLV75533PDBV
+5V
+3V3
1
3
IN
EN
OUT
5
GND
2
C5
0.1uF
GND
+3V3
+5V
C3
0.1uF
SW6
SW_RST
R1
10k
GND
F1
0ZCJ0075AF2E
FB1
BLM18PG221SH1D
PWR_FLAG
+5V
D1
BZT52-B5V6J
GND
Conn_USB
J1
4
3
2
1
PD+
PD-
5V_IN
GND
C1
18pF
18pF
C2
Y1
Crystal_GND24
GND
UD+
UD-
R8
R9
22
22
C4
1uF
U1
ATmega32U2-AU
UVCC
VCC
AVCC
31
4
32
24
PC1/RESET
1
XTAL1
2
PC0/XTAL2
29
D+
30
D-
27
UCAP
PB0 14
PB1 15
PB2 16
PB3 17
PB4 18
PB5 19
PB6 20
PB7 21
PD0 6
PD1 7
PD2 8
PD3 9
PD4 10
PD5 11
PD6 12
HWB/PD7 13
PC2 5
PC4 26
PC5 25
PC6 23
PC7 22
UGND 28
GND 3
GND
SDA
SCL
RDY
+3V3
R2
10k
SW7
SW_HWB
GND
U3
USBLC6-2SC6
+5V
PD- 6
UD- 1
4 PD+
3 UD+
5
2
GND
Sensor Connector
GND
+3V3
RDY
RST
SCL
SDA
6
5
4
3
2
1
J2
MK13
LOGO
MK1
BADGE
MK5
Mounting_Hole
MK6
Mounting_Hole
GND

License: CERN-OHL-S 2.0
Engineer: Lukas F. Hartmann
https://mntre.com
MNT Research GmbH

Sheet: /
File: reform2-trackpad.kicad_sch

Title: MNT Reform 2 Trackpad

Size: A4
Date: 2020-10-03
Rev: 2.0R-1
KiCad E.D.A. kicad 7.0.6+dfsg-1
Id: 1/1

9.11 Trackpad Bill of Materials

Designator	Qty	Value	Brand	Part Number
C1-C2	2	18pF	Yageo	CC0603JRNPO9BN180
C3 C5	2	0.1uF	Yageo	CC0603JPX7R9BB104
C4	1	1uF	Taiyo Yuden	UMK107BJ105KA-T
D1	1		Nexperia	BZT52-B5V6J
F1	1		Bel Fuse	0ZCJ0075AF2E
FB1	1		Murata	BLM18PG221SH1D
J1	1		JST	B4B-PH-K-S(LF)(SN)
J2	1		Hirose	FH12-6S-0.5SH(55)
R1-R2	2	10kΩ	Vishay Dale	CRCW060310K0JNEAC
R8-R9	2	22Ω	Yageo	RT0603DRD0722RL
R10-R11	2	4.7kΩ	Yageo	RC0603FR-074K7L
SW6	1		Diptronics	PTLP2
SW7	1		Apem	DM01
U1	1		Microchip	ATMEGA32U2-AU
U2	1		Texas Instruments	TLV75533PDBVR
U3	1		STMicro	USBLC6-2SC6
Y1	1	16MHz	Abracon	ABM8AIG-16.000MHz-4-T

9.12 Battery Pack Schematics

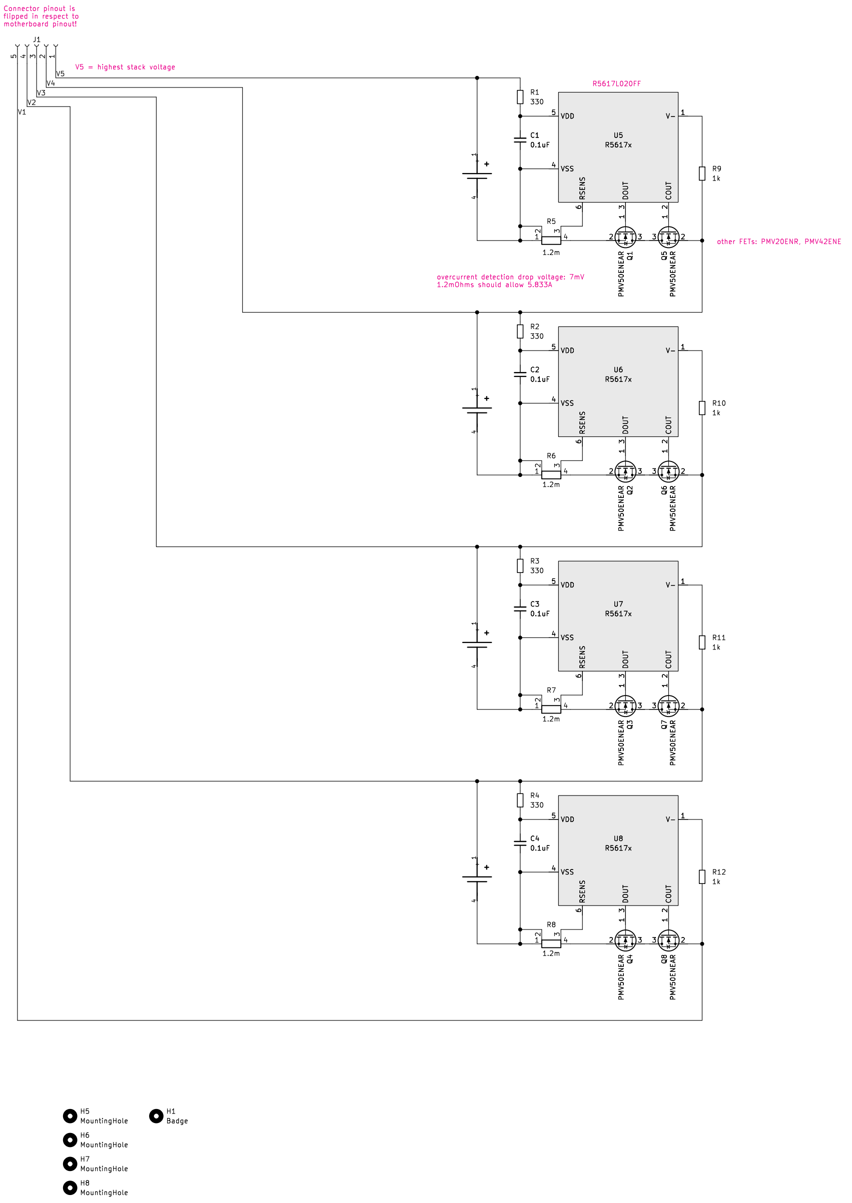
Connector pinout is flipped in respect to motherboard pinout!
J1
5 4 3 2 1
V5 = highest stack voltage
V5
V4
V3
V2
V1
R5617L020FF
R1
330
C1
0.1uF
U5
R5617x
VDD
V-
VSS
RSENS
DOUT
COUT
R9
1k
R5
1.2m
Q1
PMV50ENEAR
Q5
PMV50ENEAR
other FETs: PMV20ENR, PMV42ENE
overcurrent detection drop voltage: 7mV
1.2mOhms should allow 5.833A
R2
330
C2
0.1uF
U6
R5617x
R10
1k
R6
1.2m
Q2
PMV50ENEAR
Q6
PMV50ENEAR
R3
330
C3
0.1uF
U7
R5617x
R11
1k
R7
1.2m
Q3
PMV50ENEAR
Q7
PMV50ENEAR
R4
330
C4
0.1uF
U8
R5617x
R12
1k
R8
1.2m
Q4
PMV50ENEAR
Q8
PMV50ENEAR
H5
MountingHole
H6
MountingHole
H7
MountingHole
H8
MountingHole
H1
Badge

https://mntre.com
License: CERN OHL-S 2.0
Engineer: Lukas F. Hartmann
MNT Research GmbH
Sheet: /
File: reform2-protected-batterypack-pcb.kicad_sch

Title: MNT Reform Protected Battery Pack

Size: A3	Date: 2022-10-10	**Rev: 2.0 R-2**
KiCad E.D.A. kicad 7.0.6+dfsg-1		Id: 1/1

9.13 Battery Pack Bill of Materials

Designator	Qty	Value	Brand	Part Number
C1-C4	4	0.1uF	Generic	0603 0.1uF 50V
J1	1		Molex	504050-0591
Q1-Q8	8		Nexperia	PMV50ENEAR
R1-R4	4	330Ω	Generic	0603 330Ohms
R5-R8	4	1.2mΩ	Generic	1206 1.2mOhms (0.12Ohms) 1%
R9-R12	4	1kΩ	Generic	0603 1kOhms
U1-U4	4		Keystone	54
U5	1		Nisshinbo	R5617L020FF
U6	1		Nisshinbo	R5617L020FF
U7	1		Nisshinbo	R5617L020FF
U8	1		Nisshinbo	R5617L020FF

9.14 Assembly Parts

Part	Qty	Brand	Part Number
USB/SYSCTL Cable JST-PH 4P	3	MNT Research	MREFCBLU20R01
Speaker Cable JST-PH 4P	1	MNT Research	MREFCBLS20R01
eDP I-PEX to DuPont 2mm 2×15P Cable	1	MNT Research	MNT190722001
Sensor Cable 6P 50mm 0.5mm Pitch	1	Würth Elektronik	687606050002
OLED Cable 1mm Pitch 50mm	1	Würth Elektronik	686704050001
MIPI-DSI Cable FPC 0.5mm 33P 50mm	1	Würth Elektronik	687733050002
Battery Cable Picolock	2	Molex	15132-0503
Main Box Al6061 Black	1	MNT Research	MREFCMBT20R01
Bottom Plate Acrylic Transparent	1	MNT Research	MREFCBPL20R01
Keyboard Frame Al6061 Black	1	MNT Research	MREFCKBF20R01

Part	Qty	Brand	Part Number
Left Port Cover Steel Black	1	MNT Research	MREFCPCL20R01
Right Port Cover Steel Black	1	MNT Research	MREFCPCR20R01
Screen Back Al6061 Black	1	MNT Research	MREFCSCB20R01
Screen Front Al6061 Black	1	MNT Research	MREFCSCF20R01
Right Hinge	1	Smooth Technology	SMS-ZZ-219-L
Left Hinge	1	Smooth Technology	SMS-ZZ-219-R
Neodymium Bar Magnet	8	MNT Research	MREFDMAG20R01
Rubber Foot Transparent	4	Modulor	0303782
Screw M4×5 Countersunk DIN 965H	6	Accu	SIK-M4-5-A2
Screw M2×12 Countersunk DIN 965H	4	Accu	SIP-M2-12-A2
Screw M2×6 Countersunk DIN 965H	18	Accu	SIK-M2-6-A2
Screw M2×4 Pan Head DIN 7985H	30	Accu	SIP-M2-4-A2
Screw M2×5 Black Countersunk DIN 965H	23	Generic	–
Trackball Button Big (SLA)	2	MNT Research	MREFXTB120R02
Trackball Button Small (SLA)	3	MNT Research	MREFXTB220R02
Trackball Cup (PLA)	1	MNT Research	MREFXTBC20R02
Trackball Lid (PLA)	1	MNT Research	MREFXTBL20R02
Trackpad Assembly (PLA/Rubber/Glass)	1	MNT Research	MREFXTPH20R02
Speaker Holder (PLA)	2	MNT Research	MREFXSPK20R02
POM Ball Black 25mm	1	MNT Research	MREFBALB20R02
Trackpad Sensor		Azoteq	TPS65-201A-B
Display Panel eDP IPS 12.5”	1	Innolux	N125HCE-GN1
Speaker	2	PUI Audio	AS01808AO-3-R
Keycap 1U	64	FKcaps	MBK Choc Glow
Keycap 1U Homing	2	FKcaps	MBK Choc Glow

Part	Qty	Brand	Part Number
Keycap 1.25U	4	FKcaps	MBK Choc Glow
Keycap 1.5U	5	FKcaps	MBK Choc Glow
Keycap 1.75U	2	FKcaps	MBK Choc Glow
Keycap 1.5U Convex	2	FKcaps	MBK Choc
Keycap 2U Convex	1	FKcaps	MBK Choc
Power Supply 24V 2.5A 60W	1	Mean Well	GST60A24
Power Cable IEC 60320 C14	1	Depending on Region	–
Battery Cell LiFePO4 18650	1	Eremit	IFR-18650

Chapter 10

Online Resources

Get the latest news and additional resources for MNT Reform at:

- The MNT Research website: `https://mntre.com`
- The MNT Community forum: `https://community.mnt.re`
- Source code repositories (including electronics design files and 3D models for printing and laser cutting): `https://source.mnt.re/reform`
- MNT Research on Crowd Supply: `https://www.crowdsupply.com/mnt`
- MNT Research Shop: `https://shop.mntre.com`
- For email support, contact: `support@mntre.com`
- Modularity explained (including a comparison table of Processor Modules): `https://mntre.com/modularity.html`
- PDF and web versions of manuals, including this handbook: `https://mntre.com/docs-reform.html`
- iFixit Maintenance Guides for MNT Reform: `https://www.ifixit.com/Device/MNT_Reform`

You can join fellow MNT Reform enthusiasts in the official IRC channel `#mnt-reform` on `irc.libera.chat`.

Discover more about the main software building blocks of the MNT Reform system:

- Debian GNU/Linux: `https://debian.org`
- U-Boot: `https://docs.u-boot.org/en/latest/`
- Sway: `https://swaywm.org`
- Wayfire: `https://wayfire.org`

Chapter 11

Credits

The MNT Reform Operator Handbook, Second Edition. Berlin, March 2024. Written by Lukas F. Hartmann and Anri Paul Hennies. Published by MNT Research GmbH.

Concept, Electronics, Software Lukas F. Hartmann

Industrial Design Ana Beatriz Albertini Dantas

Quality & Assembly, Sleeve Design Greta Melnik

Handbook Design 100rabbits, Lukas F. Hartmann

Additional Editing Brendan Nystedt, Liaizon Wakest, Johannes Schauer Marin Rodrigues

3D Illustration Paul Klingberg

Accounting Christian ‘plomlompom’ Heller

Debian Integration & Tooling Johannes Schauer Marin Rodrigues

Contributions & Thanks Patrick Wildt, Sigrid Solveig Haflínudóttir, Cinap Lenrek, Stanley Lieber, Dirk Eibach, Jacqueline Leykam, Neil Armstrong, John Bliss, Chartreuse, Norman Feske & Stefan Kalkowski (Genode), Valtteri Koskivuori, Jack Humbert, Nanocodebug,

Neelfyn, Maximilian Voigt, Helen Leigh, Daniel Amor, Sergio Amor, F. Schneider, Zoé & Elen (Fully Automated), Boundary Devices, Timonsku, Lukas Stach, Marek Vasut, Christian Gmeiner, Daniel Stone, Simon Ser, Chris Healy, Drew Fustini, Jonas Haring, Philip Steffan, Florian Hadler (Interface Critique), Felix Bayer, Li0n, Schneider, Sven Gebhardt, Jan Varwig, Gabriel Yoran, Martin Meyerhoff, GyrosGeier, Philipp Dikmann, Michael Christophersson, Markus Angermeier

Therapy Dog Tina

Crowdfunding Partner Crowd Supply

Additional Funding NLNet

Printed Circuit Boards PCBWay, JLCPCB

Milling JPR

Inter Font @rsms

Lab Tools Rigol DS1054Z, Fluke 117, Weller WD-1, Puhui T-962C, AmScope SM-4T, BCN3D Sigma R17, Formlabs Form2, Epilog Mini 18, Prusa i3 MK3S+

Software Debian GNU/Linux, KiCad, Inkscape, GIMP, Emacs, Vim, GitLab, LUFA, MicroBuilder, Blender, FreeCAD, OpenSCAD, Fusion, Cura, Sphinx, Pandoc, XeTeX, Scribus

© 2018-2024 MNT Research GmbH, Fehlerstr. 8, 12161 Berlin
Managing Director: Lukas F. Hartmann
Registergericht: Amtsgericht Charlottenburg
Aktenzeichen: HRB 136605 B
VAT ID: DE278908891
WEEE: DE 33315564
Web: `https://mntre.com`

MNT Reform is Open Source Hardware certified by OSHWA (UID DE000017).

The sources for this handbook and most MNT Reform software components (check repositories for details) are

licensed under GNU GPL v3 or newer. The artwork is licensed under CC BY-SA 4.0. The MNT Reform hardware design files are licensed under CERN-OHL-S 2.0. The MNT symbol is a registered trademark of MNT Research GmbH.

PinguinDruck.de

REFORM